searchlight

ASSEMBL Y INSTR UCTIONS

9550
QL00559

CE

IP44

A

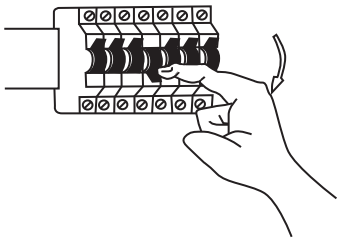

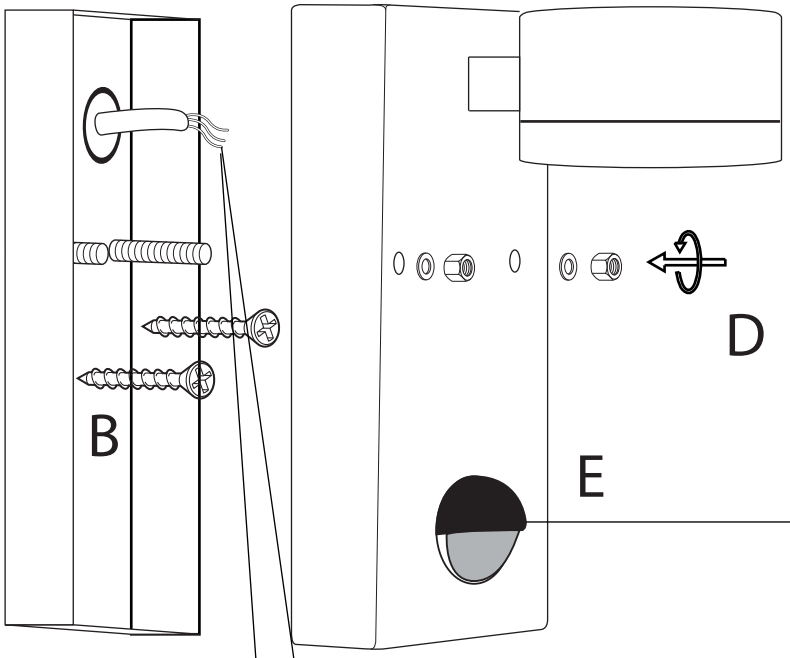

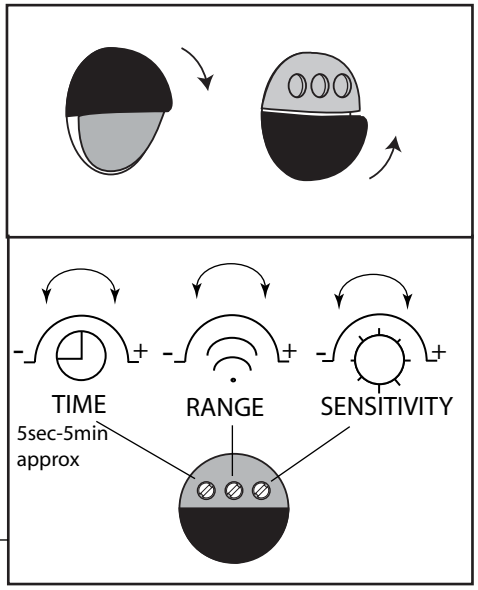

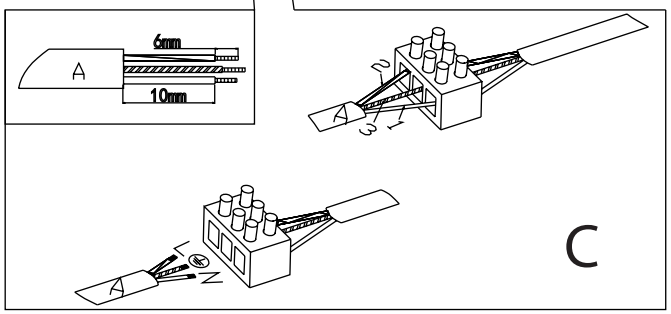

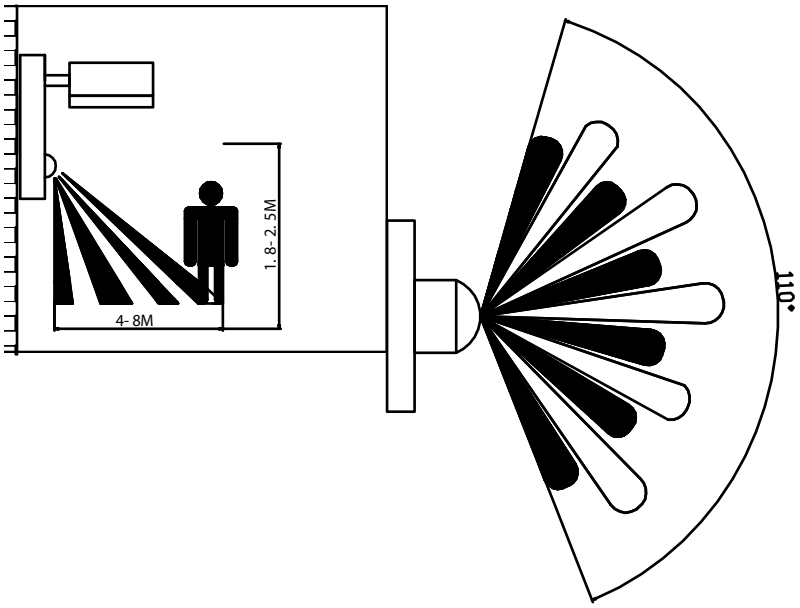

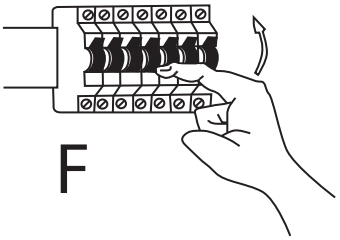

F