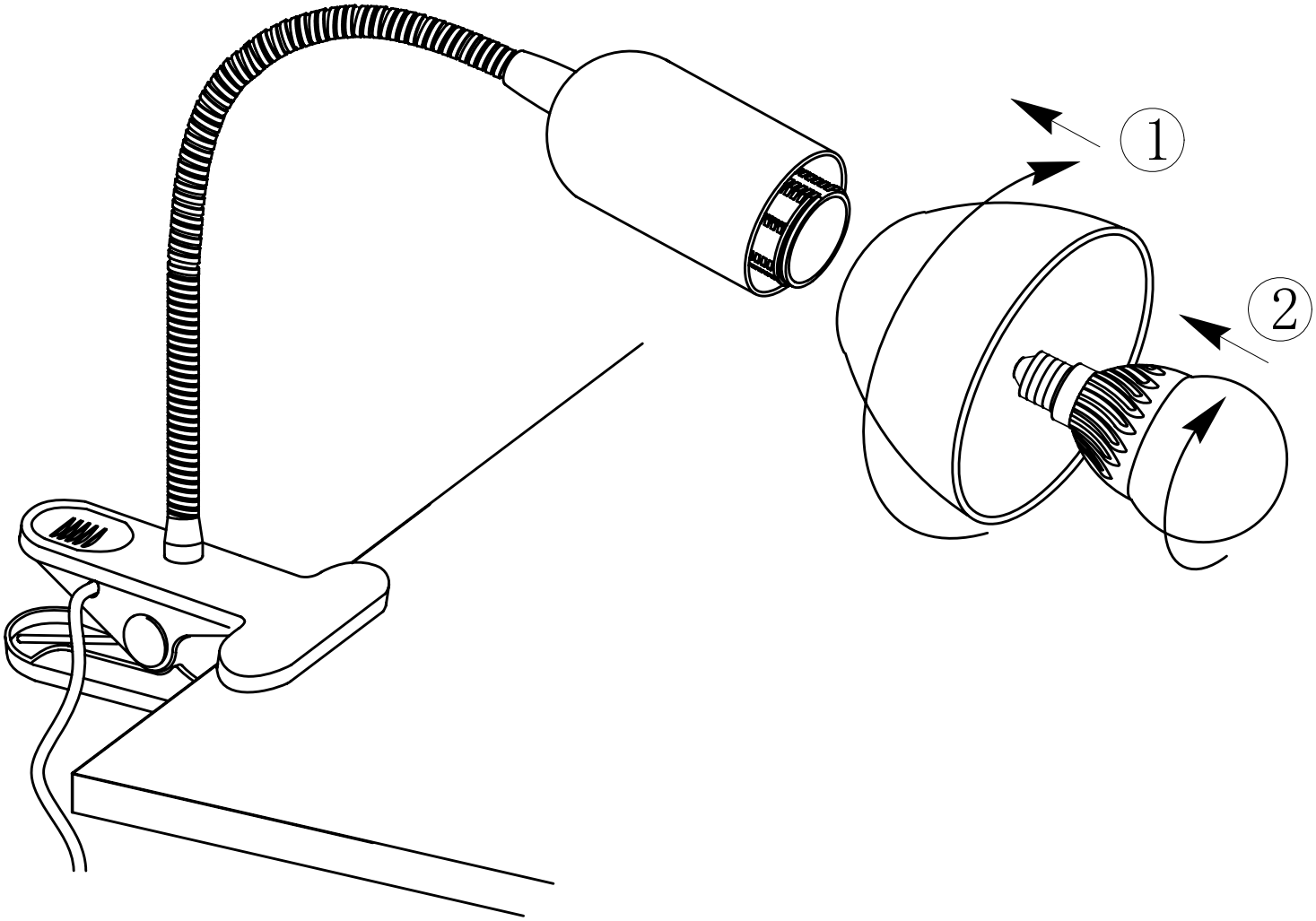

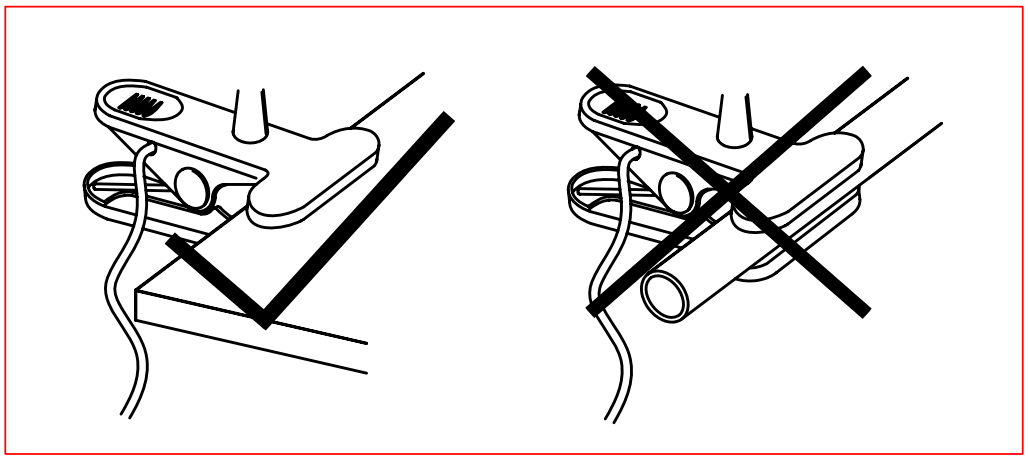

BLA92932