nordlux®

A

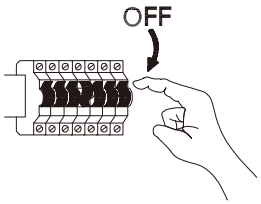

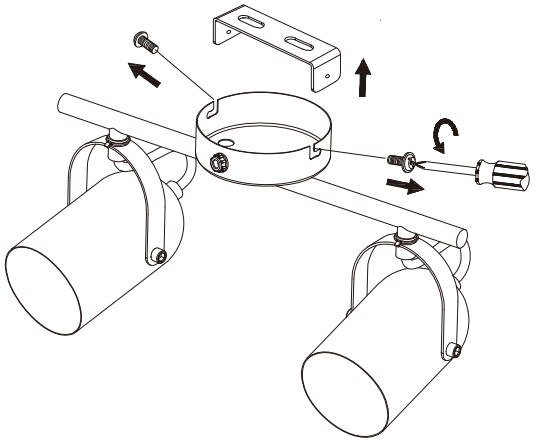

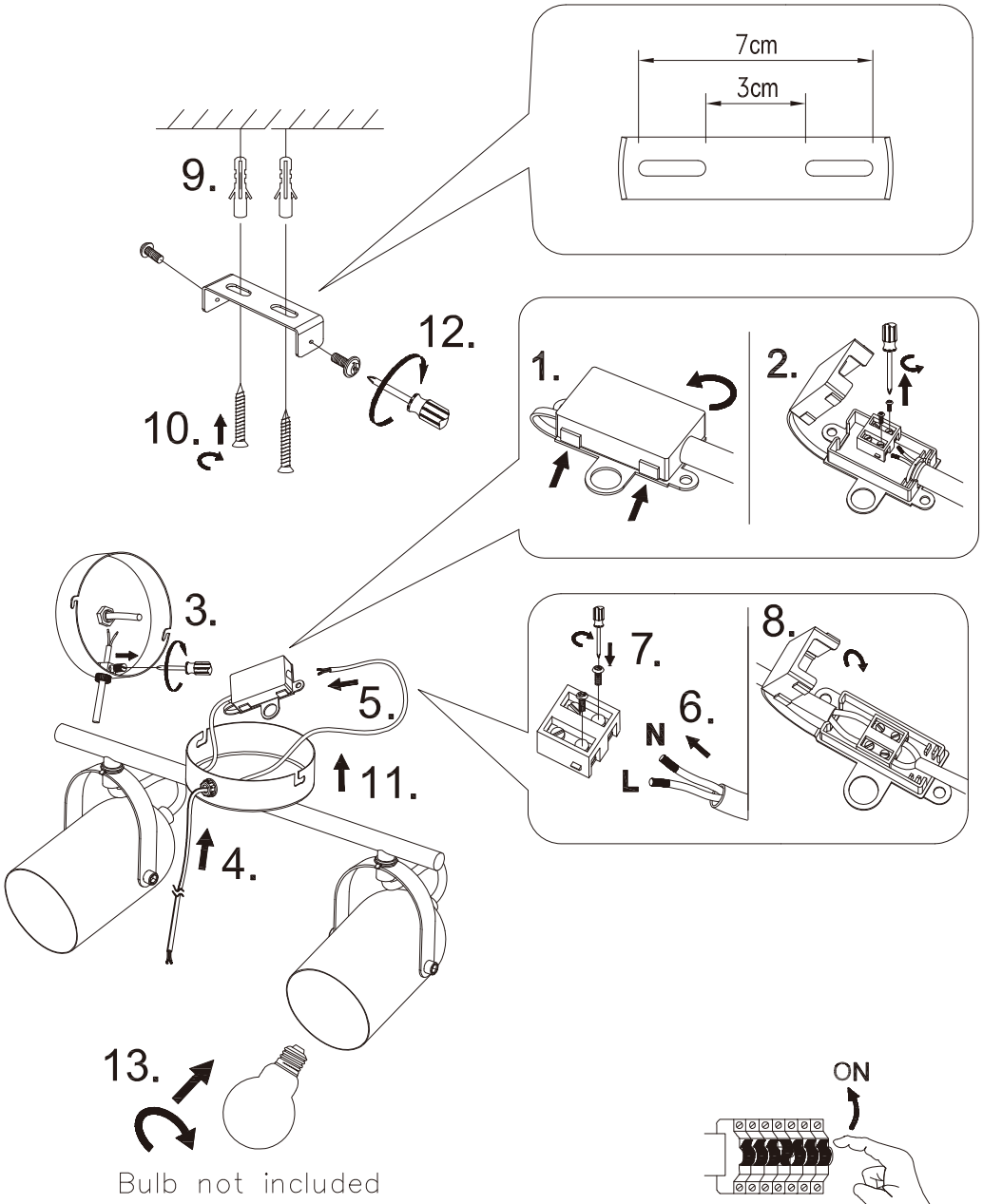

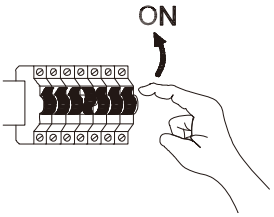

LOTUS

Monteringsanvisning | Montageanleitung | Mounting instruction | Installationsanvisningar | Instructions de montage | Dessin: 5011