nordlux®

A

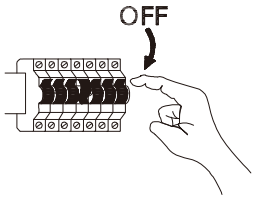

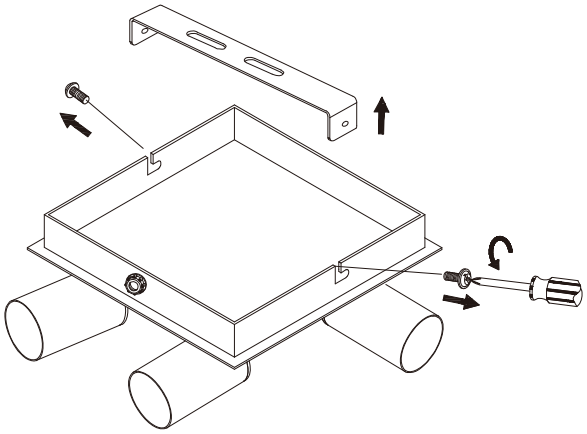

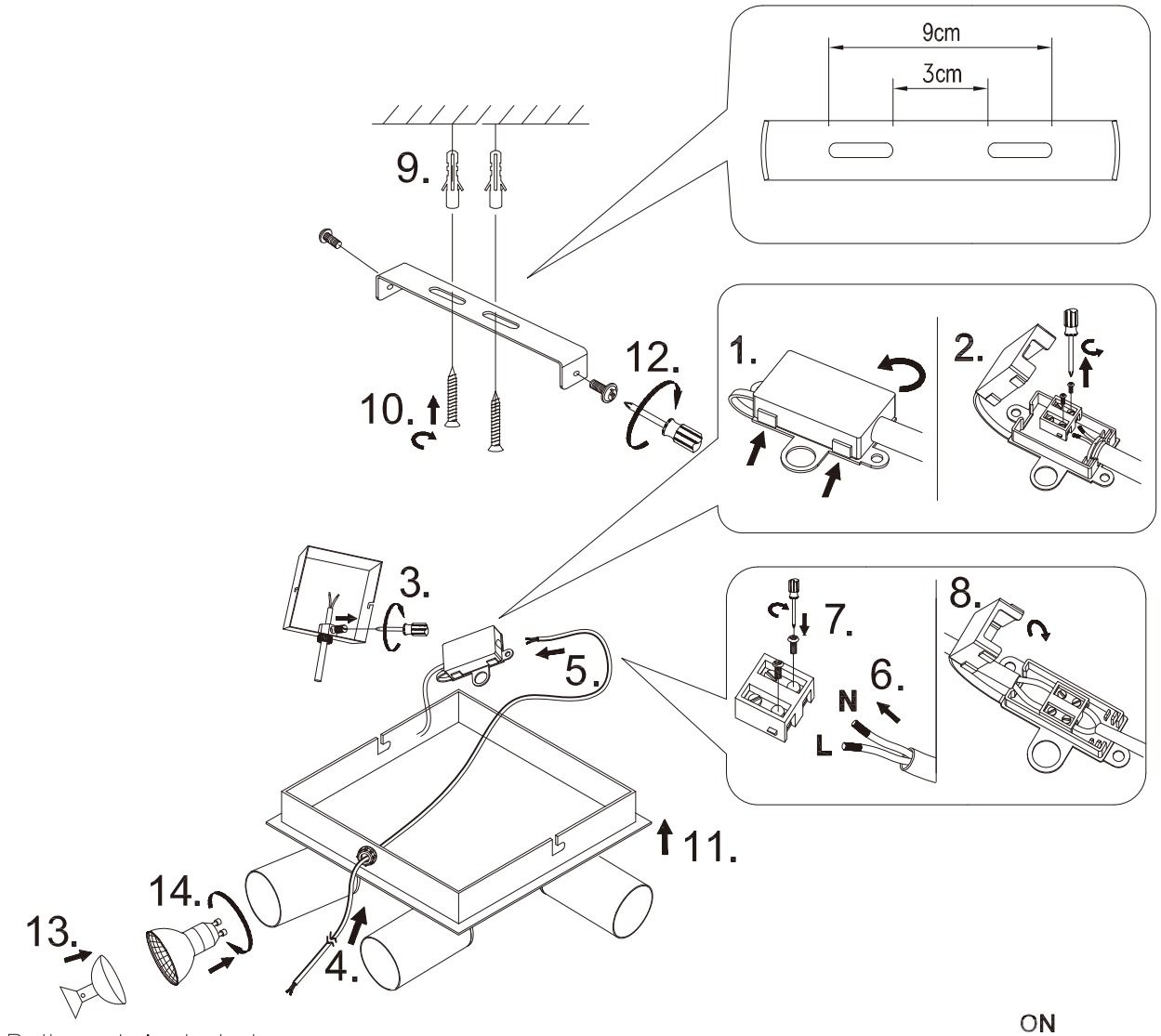

Bulb not included

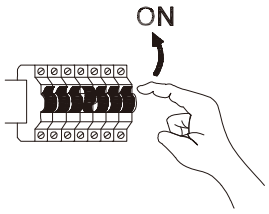

FRIDA

Monteringsanvisning | Montageanleitung | Mounting instruction | Installationsanvisningar | Instructions de montage | Dessin: 4982