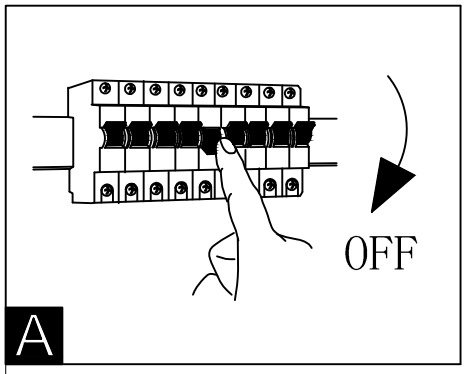
OFF
A

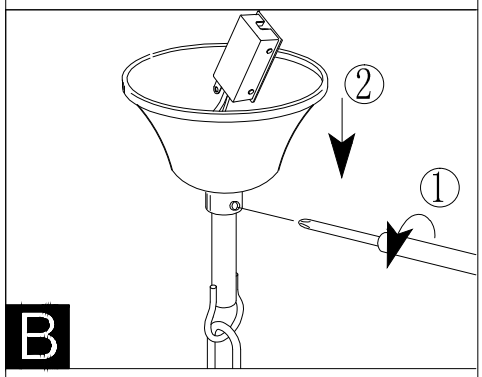
②
①
B

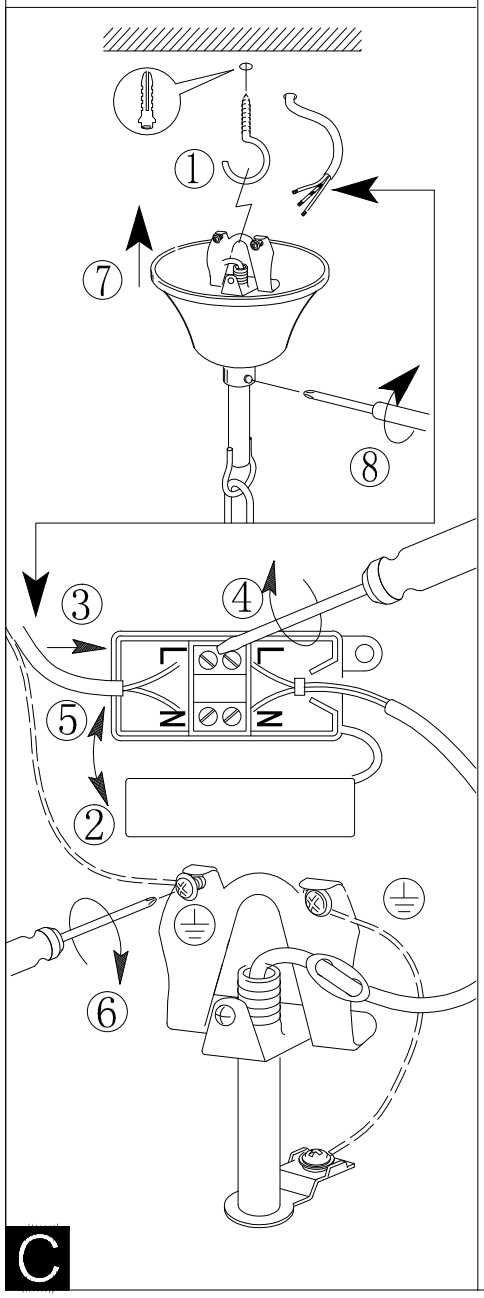
①
⑦
⑧
③
④
⑤
②
⑥
C

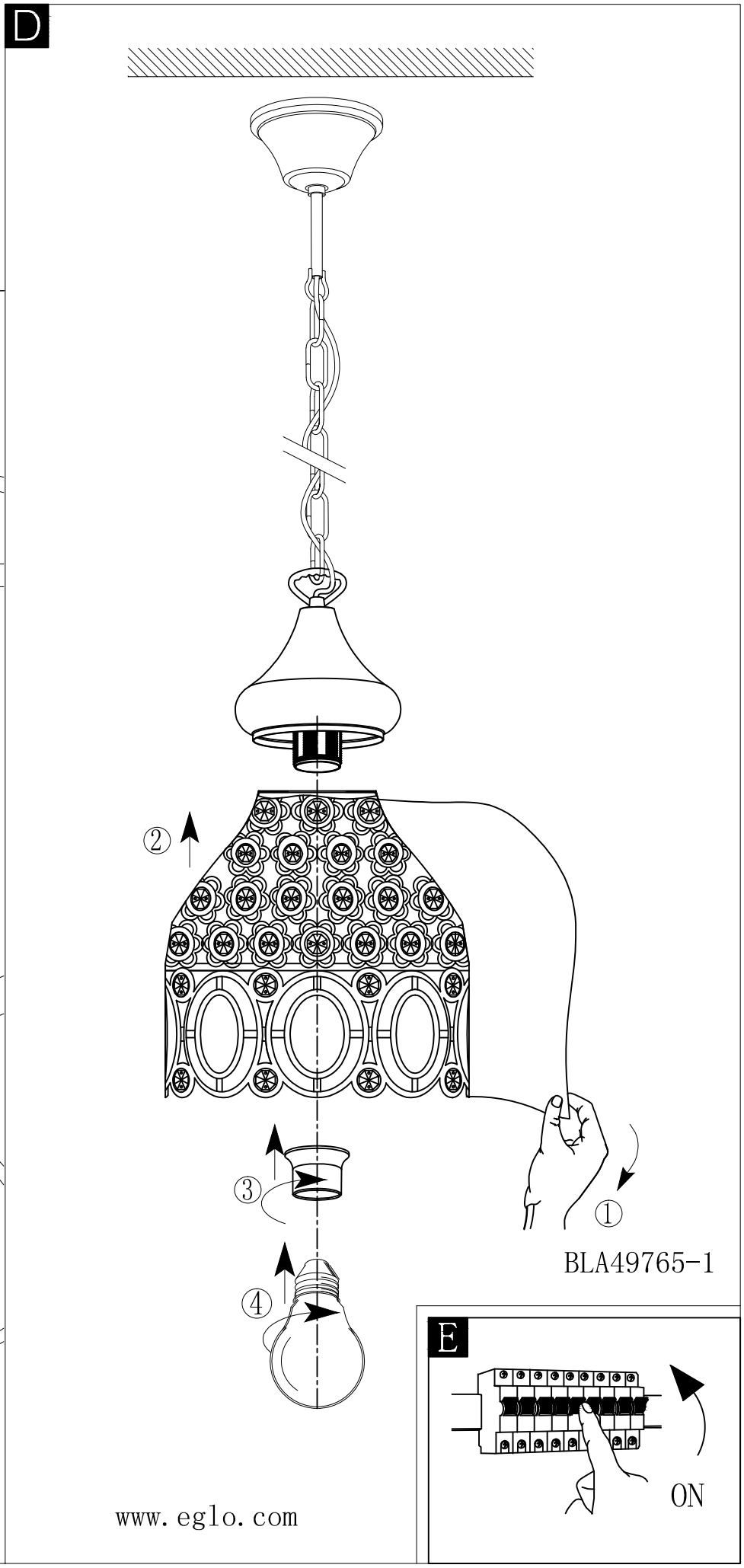
D
②
③
④
①
BLA49765-1
E
ON
www.eglo.com