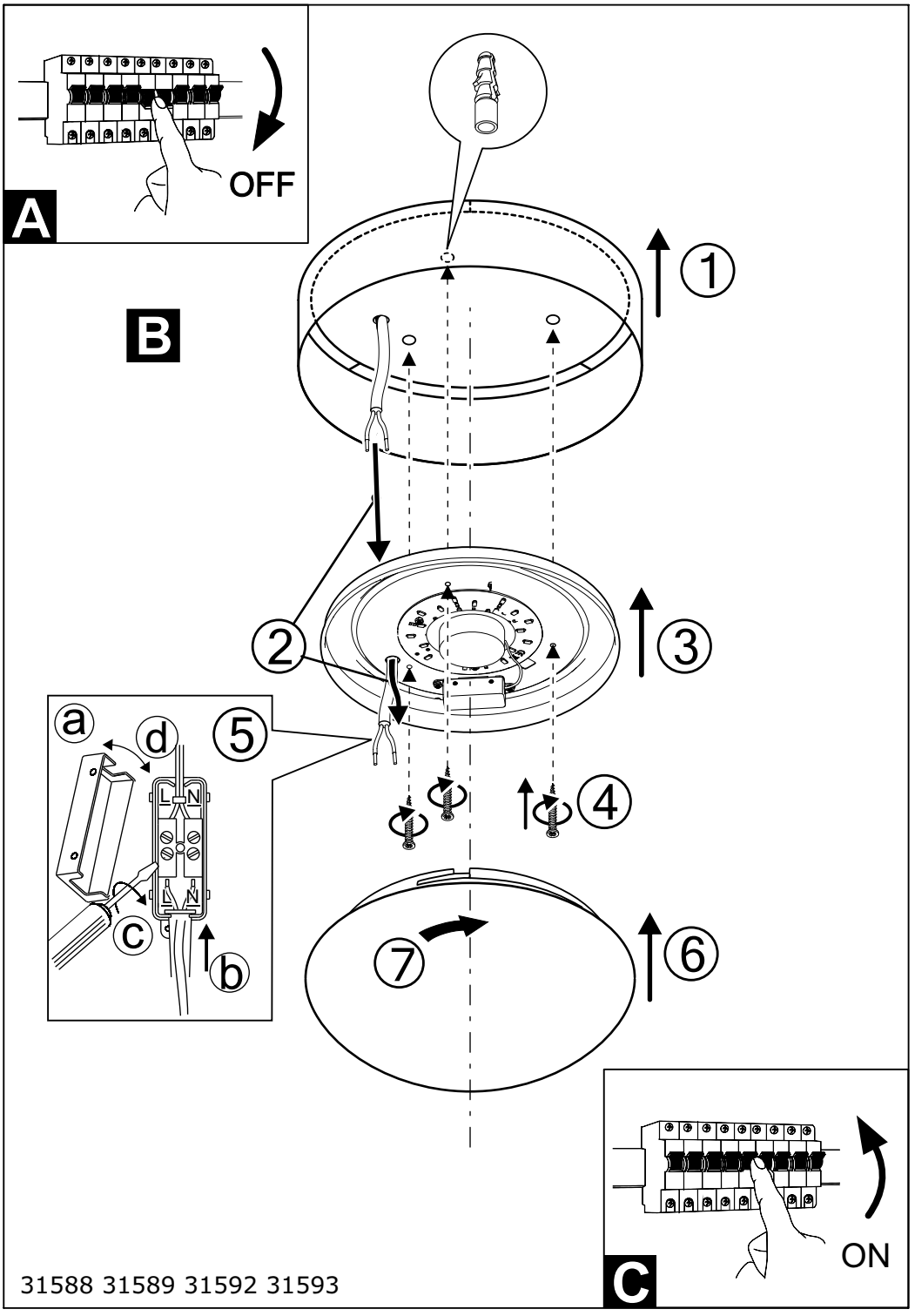

31588 31589 31592 31593