nordlux®

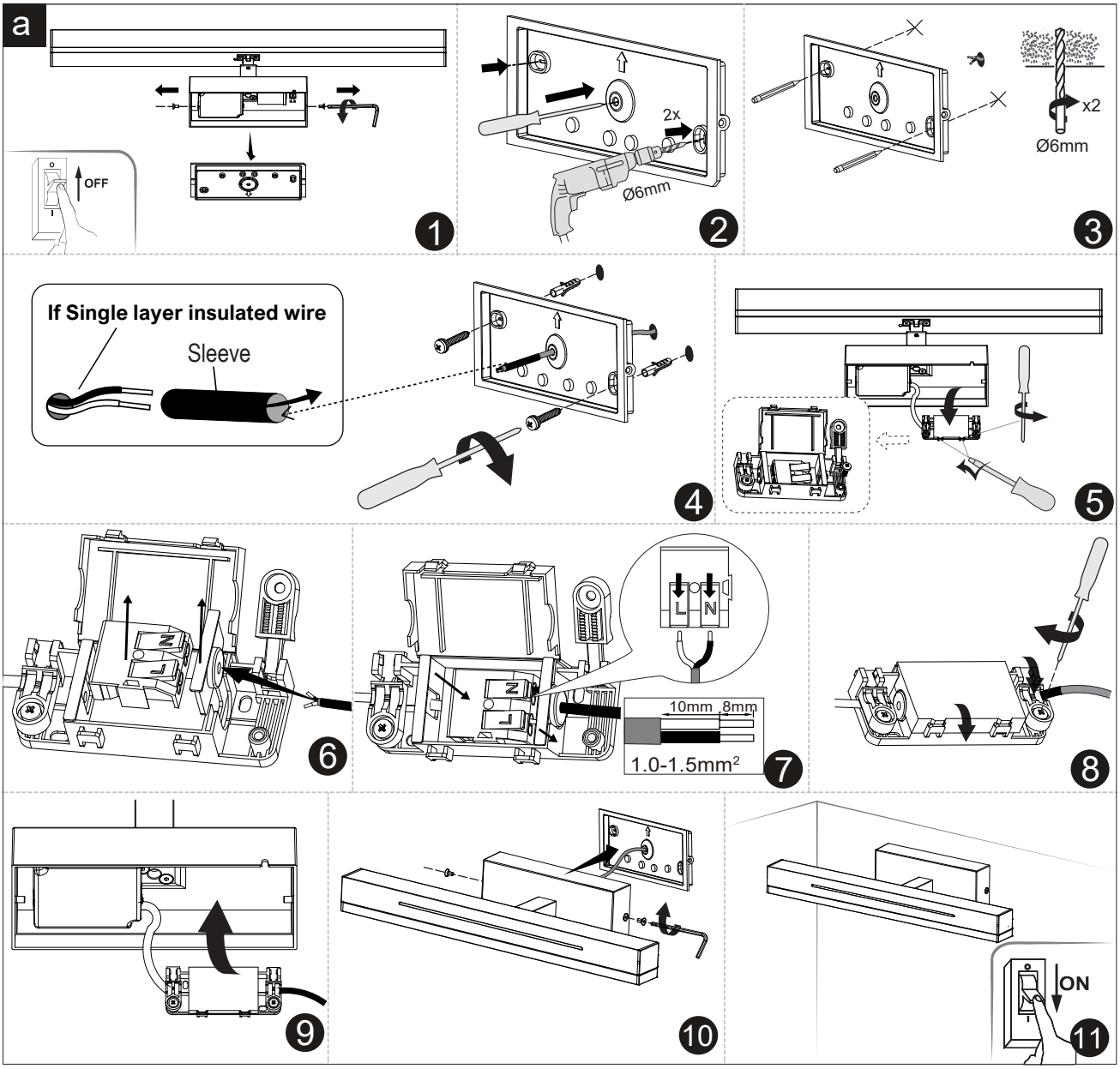

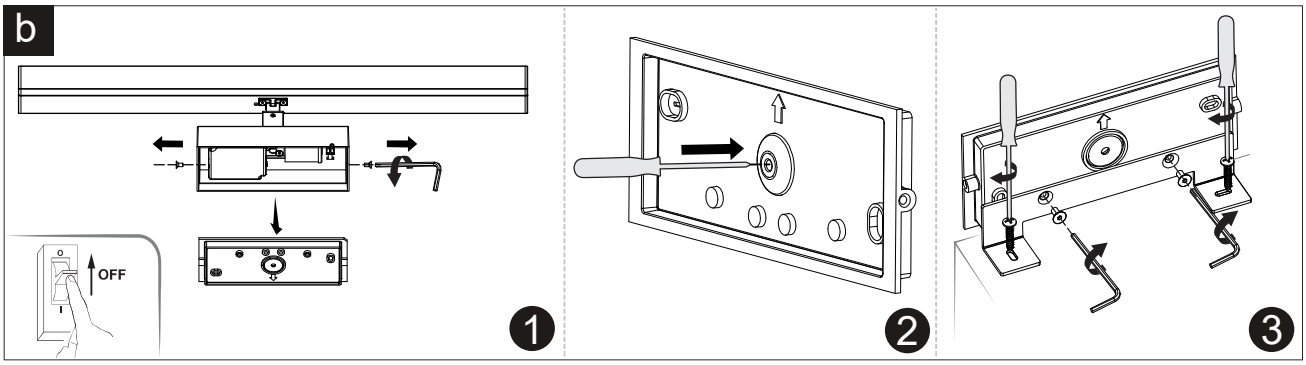

OTIS 40 IP44

Item N°: 2015401001 | 2015401033 | 2015401055

Monteringsanvisning | Montageanleitung | Mounting instruction | Installationsanvisningar | Instructions de montage | Montage-instructies

b

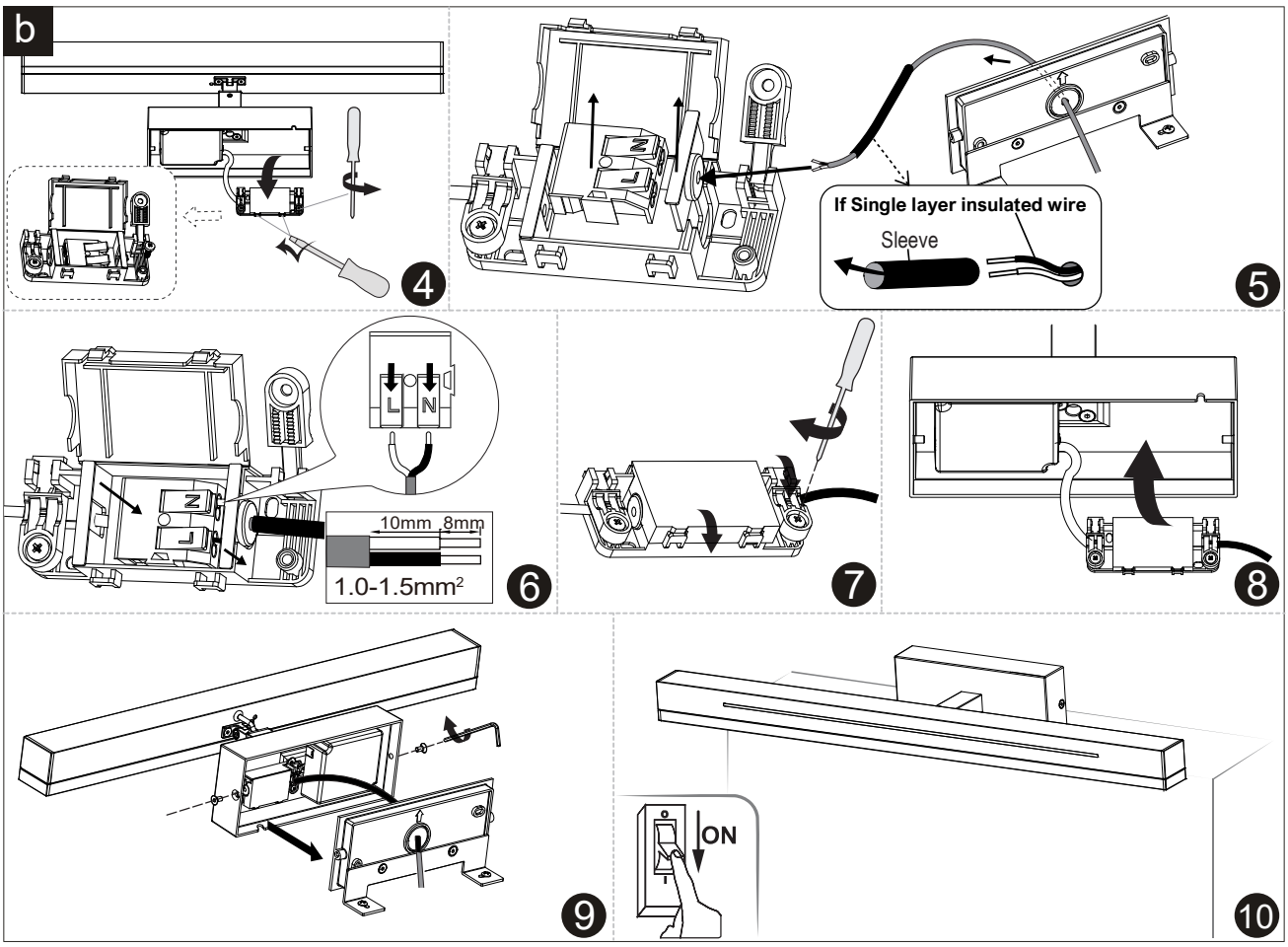
4
5
If Single layer insulated wire
Sleeve
L
N
10mm
8mm
1.0-1.5mm²
6
7
8
9
ON
10

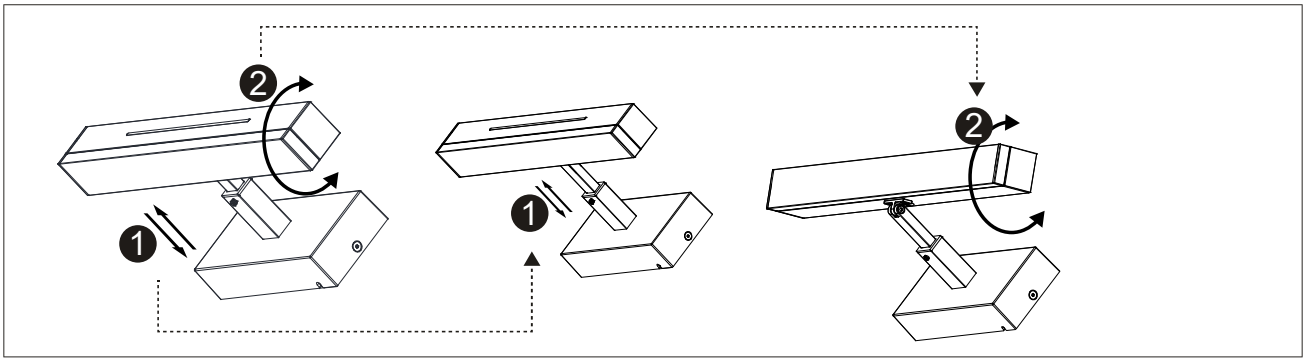
1
2
1
2

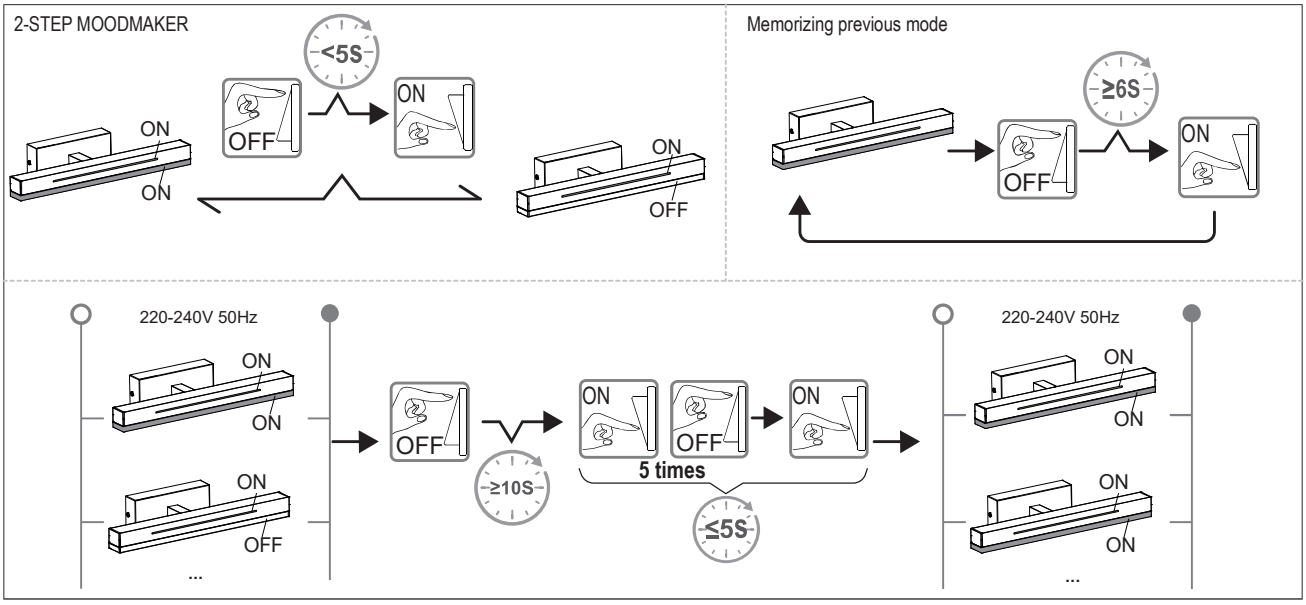
2-STEP MOODMAKER
<5S
ON
OFF
ON
ON
ON
OFF
Memorizing previous mode
≥6S
OFF
ON
220-240V 50Hz
ON
ON
ON
OFF
...
OFF
≥10S
ON
OFF
ON
5 times
≤5S
220-240V 50Hz
ON
ON
ON
ON
...