nordlux®

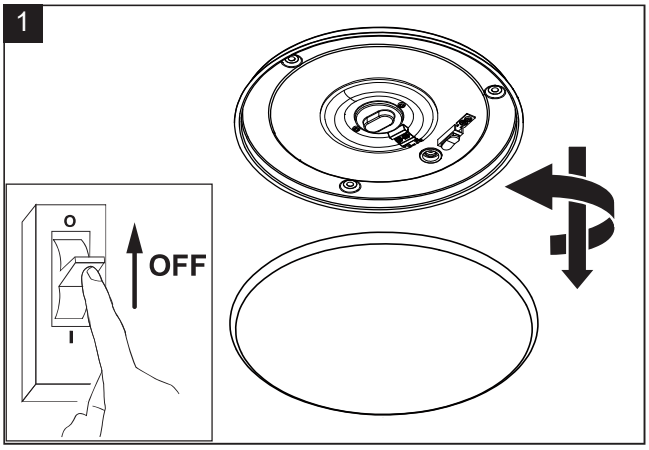

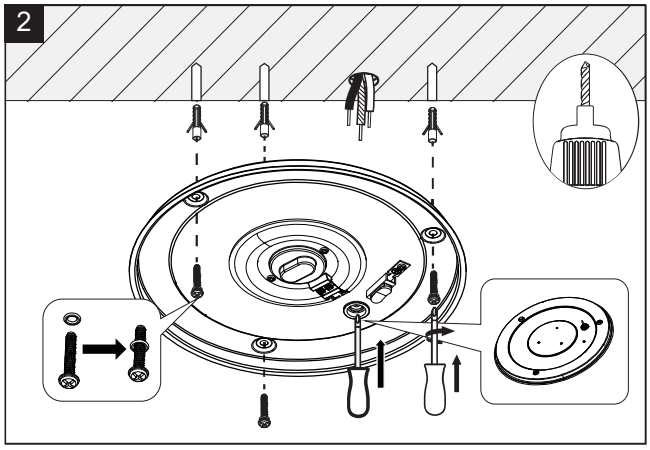

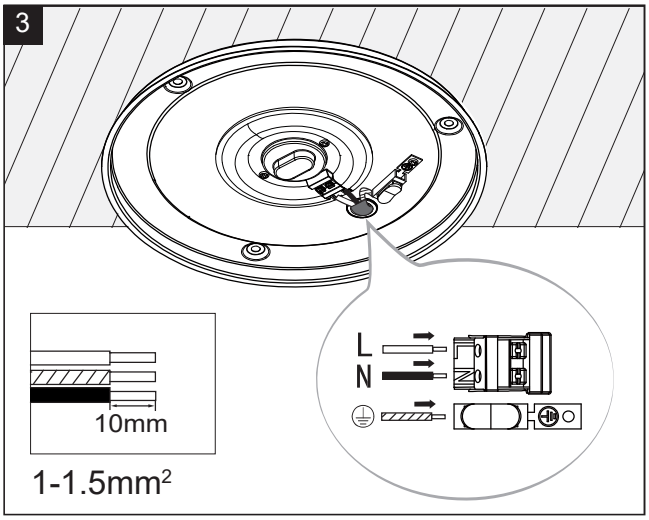

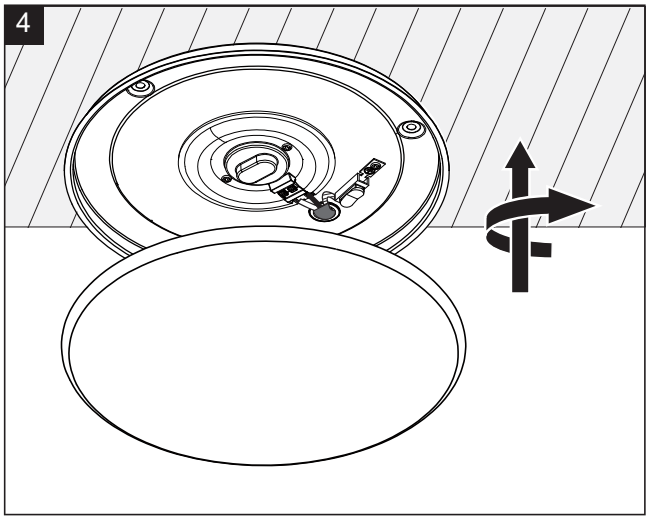

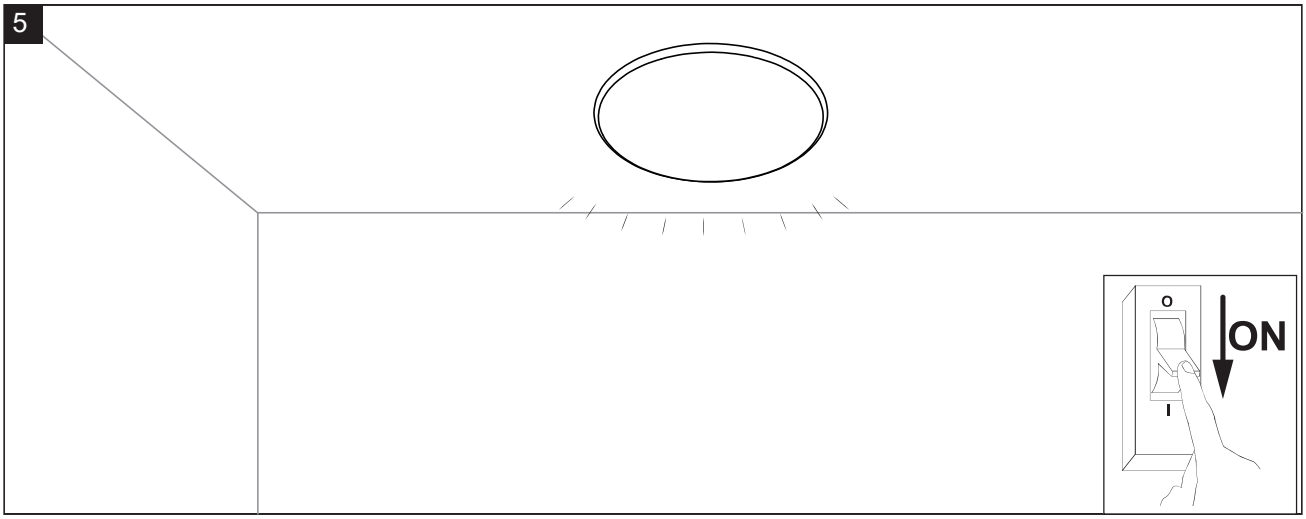

MONTONE 25 IP44

Monteringsanvisning | Montageanleitung | Mounting instruction | Installationsanvisningar | Instructions de montage | Dessin: 2015176101