LEDS C4

CLIP / 15-4682

1

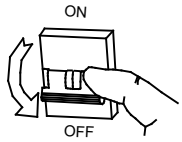

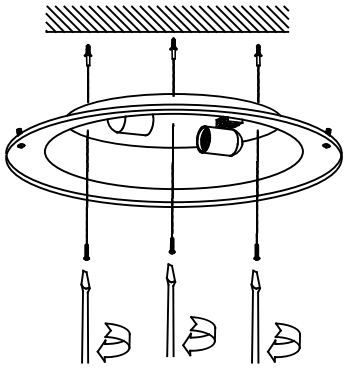

2

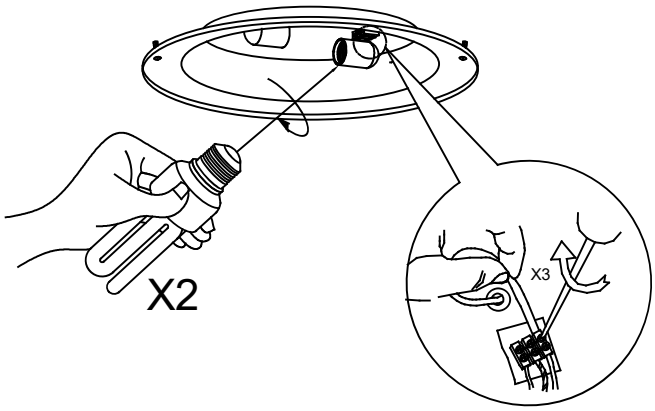

3

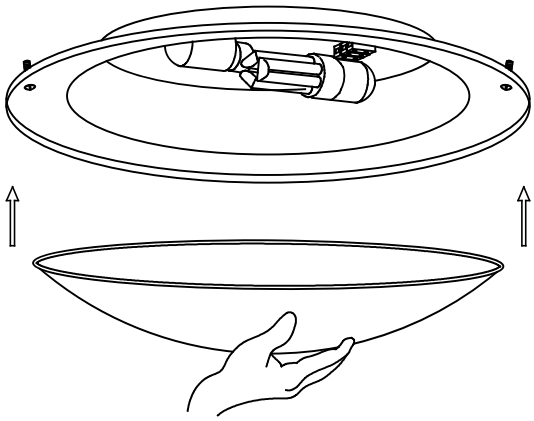

4

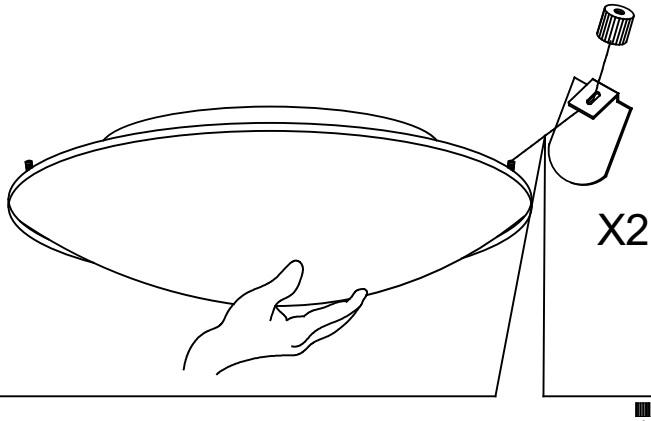

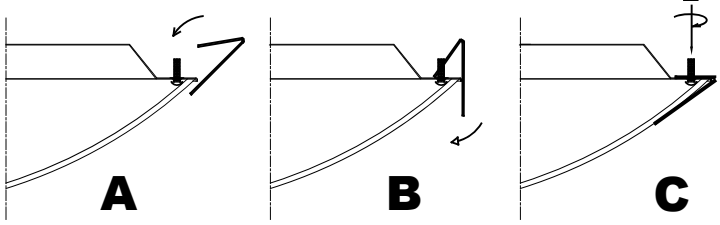

5

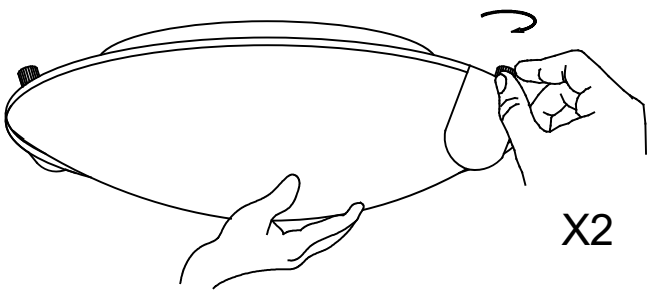

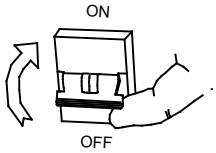

6

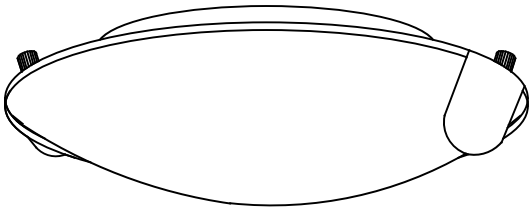

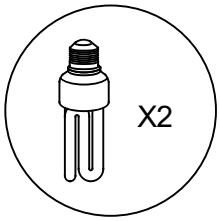

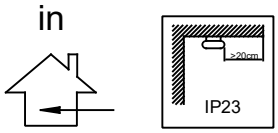

18-12-18