1275 LED Driver-350mA

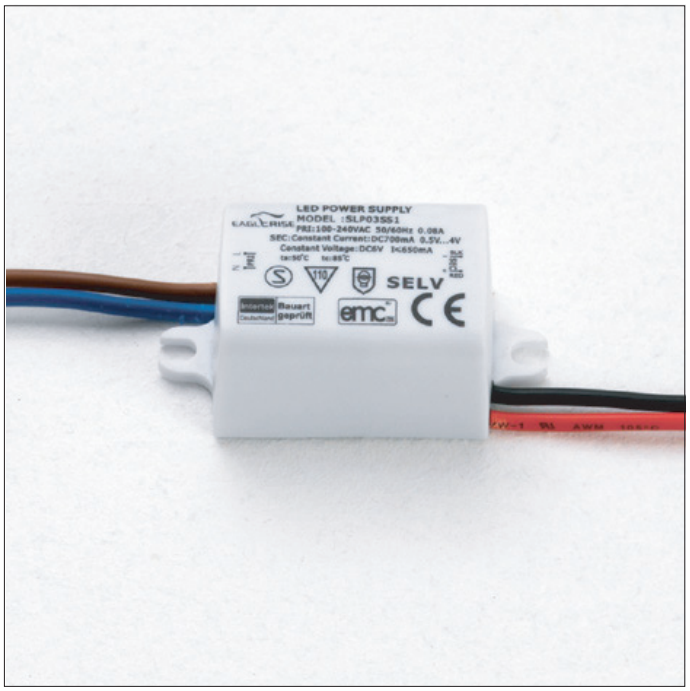

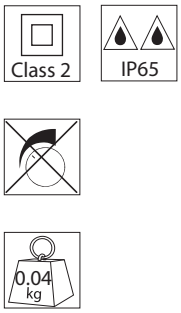

Driver Specification:

Input Voltage: 100-240VAC 50 /60Hz
Constant Currect: DC350mA 0.5v.....10v
Rated Load: 1...3 x 1w Max
Load Connection: Series

front view
vue frontale
vista frontal
Frontansicht
sett framifrån

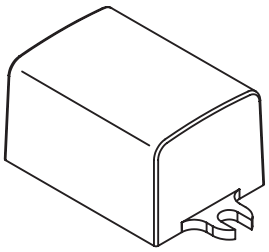

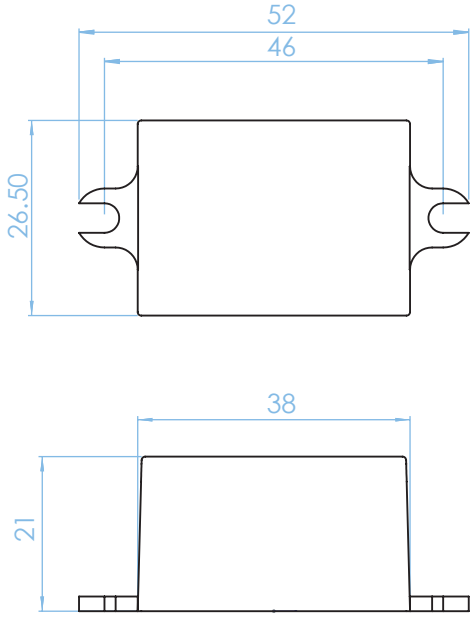

Wiring diagram

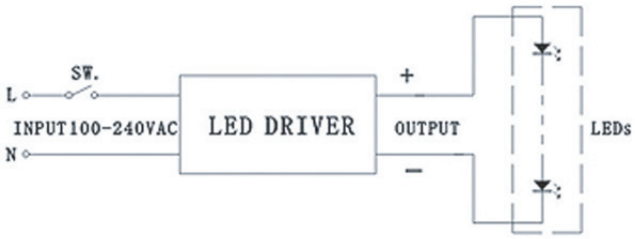

Astro Lighting Ltd.
G2 River Way,
Harlow,
Essex,
CM20 2DP
Great Britain

tel: +44 (0) 1279 427001
fax: +44 (0) 1279 427002
email: sales@astrolighting.co.uk
www.astrolighting.co.uk