LEDS C4

05-7976-81-EL

V0

Screen Wall fixture

Designer: Manel Lluscà

UGR	
S=0.250	
Ceiling/Cavity	0.7
Walls	0.5
Working Plane	0.2
Room dimensions	X=4H, Y=8H
UGR Crosswise	15.2
UGR Endwise	15.2

Description

Wall light for indoor and outdoor use.

For frontal lighting. The optical module can easily be rotated 360º. Structure material: Aluminium. Structure finish: Nickel. Diffuser material: Plastic. Diffuser finish: White. Warranty: 5 Years. Ta max: 2,525ºC.

Finish
Nickel
White

Material
Aluminium
Plastic

IP20 355º 90º 4

TECHNICAL CHARACTERISTICS

Light source
Light source: LED CREE
Output (W): 2.2W
Color temperature: LED warm-white 2700K
CRI: 80
Photobiological risk: RG2
Real Lumen: 106
Qty Leds: 1
Lm/Real W: 53
Life Time: 50.000h L80B20
Bin / Grup: 8A3/8D2
MacAdam steps: 3
UGR: 15.0

Light source
Lampholder: 1 x E27
Output (W): MAX 60W
Quantity: 1

GEAR
Brand: HEP
Gear included: Yes, electronic
Voltage / Frequency: 100-240/50-60Hz
Power Factor: 0.50

Luminaire
Recessed in-ground suitable for pedestrian crossing: No
Warranty: 5 Years
Ta max: 2,525ºC

Logistics
Energy Efficiency: A++
EAN Code: 8435575317215
Net Weight (Kg): 0.770
Weight in Kg (packaged): 1.450
Packing: 315 x 205 x 380
Masterbox: 4

The photograph may not match the reference exactly. Please read the product description to identify the finish.

LEDS C4

Luminaire
Code 05-7976-81-EL
Name BALMORAL
Measurem.
Code 05-7976-81-EL
Name BALMORAL

Luminaire Flux	106.00 lm	Luminaire Power	3.10 W	Efficacy	34.19 lm/W	Efficiency	100.00%
Sources Flux	106.00 lm	Maximum value	4386.39 cd/klm	Position	C=0.00 G=0.00	CG	Rotosymmetrical

Round Luminaire	Diam. 20 mm	Height	120 mm
Round Luminous Area	Diam. 9 mm	Height	0 mm
Horizontal Luminous Area	0.000064 m2	Emitting area on Plane 180°	0.000000 m2
Emitting area on Plane 0°	0.000000 m2	Emitting area on Plane 270°	0.000000 m2
Emitting area on Plane 90°	0.000000 m2	Glare area at 76°	0.000015 m2
Coordinate system	CG	Symmetry Type	Rotosymmetrical
Date	11-07-2019	Maximum Gamma Angle	90
Measurement Distance	0.00	Measurement Flux	106.00 lm
Operator	qualitat	Rated Voltage	
Temperature	25.00 °C	Rated Current	
Humidity	60.00 %	Photocell	
Notes			

Luminaire Lamps

Line	Code	Name	Flux [lm]	Pow. [W]	Q.ty
	05-7976-81-EL	05-7976-81-EL	106.00	3.10	1

C.I.E.	99 100 100 100 100	D DIN 5040	A60
F UTE	--	B NBN	BZ 1

Diam=20mm

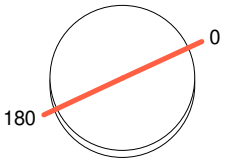

C Halfplanes

180.0 0.0

ULOR 0.00 %
DLOR100.00 %
RN 0.00 %

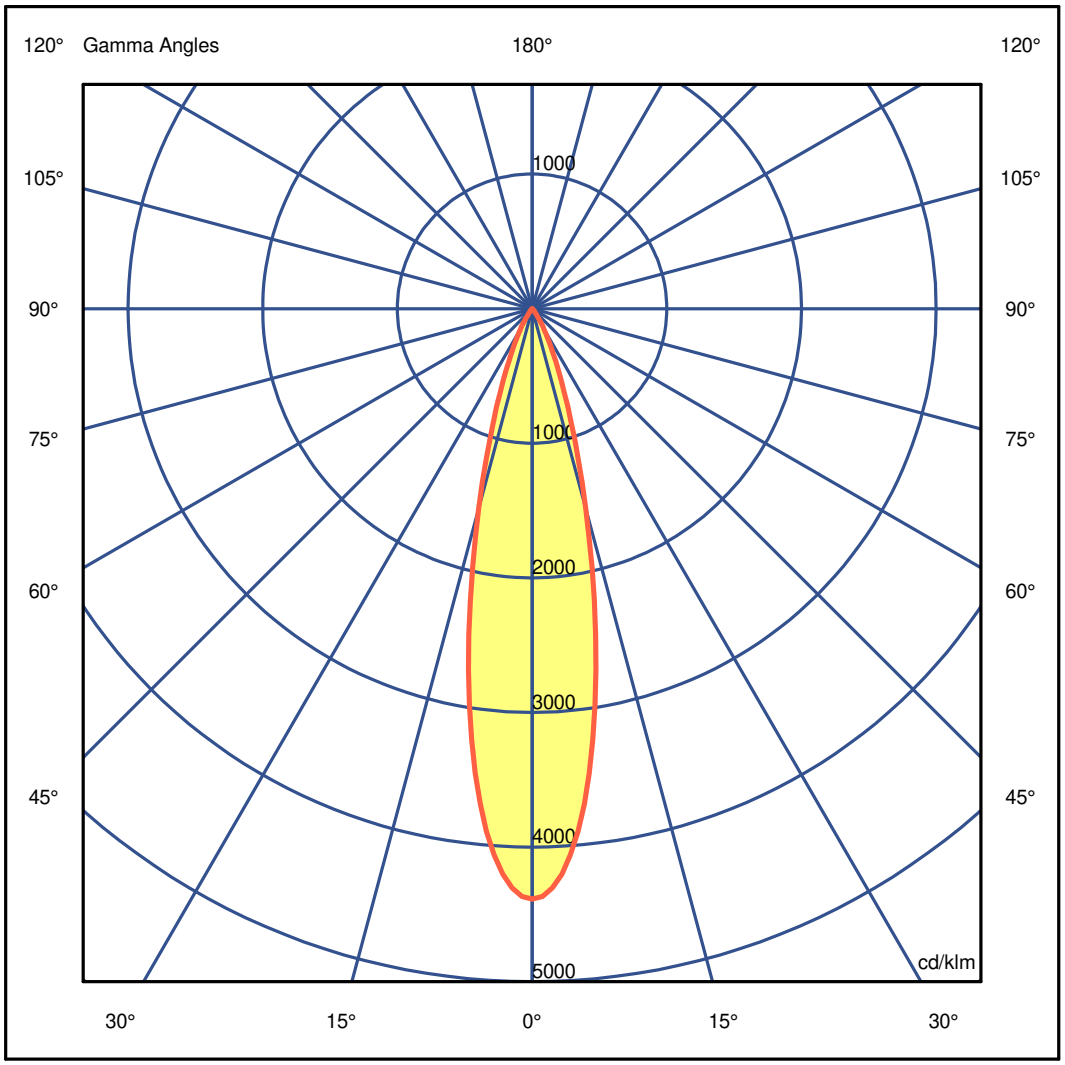

LEDS C4

Luminaire
Code 05-7976-81-EL
Name BALMORAL
Measurem.
Code 05-7976-81-EL
Name BALMORAL

Luminaire Flux	106.00 lm	Luminaire Power	3.10 W	Efficacy	34.19 lm/W	Efficiency	100.00%
Sources Flux	106.00 lm	Maximum value	4386.39 cd/klm	Position	C=0.00 G=0.00	CG	Rotosymmetrical

Luminous Intensity Table cd/klm **Table 1/1**

	C 0.00		C 0.00
G 0.0	4386.39	G 46.0	7.87
G 1.0	4366.40	G 47.0	6.69
G 2.0	4305.64	G 48.0	5.65
G 3.0	4204.78	G 49.0	4.44
G 4.0	4067.73	G 50.0	3.73
G 5.0	3897.24	G 51.0	3.25
G 6.0	3698.47	G 52.0	2.91
G 7.0	3475.27	G 53.0	2.70
G 8.0	3235.21	G 54.0	2.53
G 9.0	2982.95	G 55.0	2.38
G 10.0	2724.06	G 56.0	2.25
G 11.0	2465.00	G 57.0	2.12
G 12.0	2212.58	G 58.0	2.01
G 13.0	1971.01	G 59.0	1.90
G 14.0	1743.49	G 60.0	1.79
G 15.0	1534.82	G 61.0	1.70
G 16.0	1342.45	G 62.0	1.60
G 17.0	1172.33	G 63.0	1.51
G 18.0	1019.98	G 64.0	1.43
G 19.0	886.49	G 65.0	1.35
G 20.0	768.94	G 66.0	1.27
G 21.0	666.30	G 67.0	1.19
G 22.0	576.67	G 68.0	1.12
G 23.0	498.28	G 69.0	1.05
G 24.0	430.11	G 70.0	0.98
G 25.0	371.05	G 71.0	0.91
G 26.0	320.05	G 72.0	0.84
G 27.0	276.50	G 73.0	0.78
G 28.0	238.53	G 74.0	0.72
G 29.0	206.06	G 75.0	0.66
G 30.0	176.80	G 76.0	0.60
G 31.0	150.52	G 77.0	0.55
G 32.0	126.27	G 78.0	0.49
G 33.0	104.44	G 79.0	0.44
G 34.0	84.60	G 80.0	0.39
G 35.0	68.01	G 81.0	0.34
G 36.0	54.94	G 82.0	0.30
G 37.0	44.40	G 83.0	0.25
G 38.0	36.34	G 84.0	0.21
G 39.0	29.62	G 85.0	0.17
G 40.0	24.22	G 86.0	0.13
G 41.0	19.68	G 87.0	0.09
G 42.0	16.21	G 88.0	0.06
G 43.0	13.35	G 89.0	0.04
G 44.0	11.10	G 90.0	0.02
G 45.0	9.32		

LEDS C4

Luminaire
Code 05-7976-81-EL
Name BALMORAL
Measurem.
Code 05-7976-81-EL
Name BALMORAL

Luminaire Flux	106.00 lm	Luminaire Power	3.10 W	Efficacy	34.19 lm/W	Efficiency	100.00%
Sources Flux	106.00 lm	Maximum value	4386.39 cd/klm	Position	C=0.00 G=0.00	CG	Rotosymmetrical

Diam=20mm

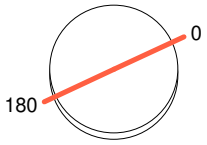

C Halfplanes

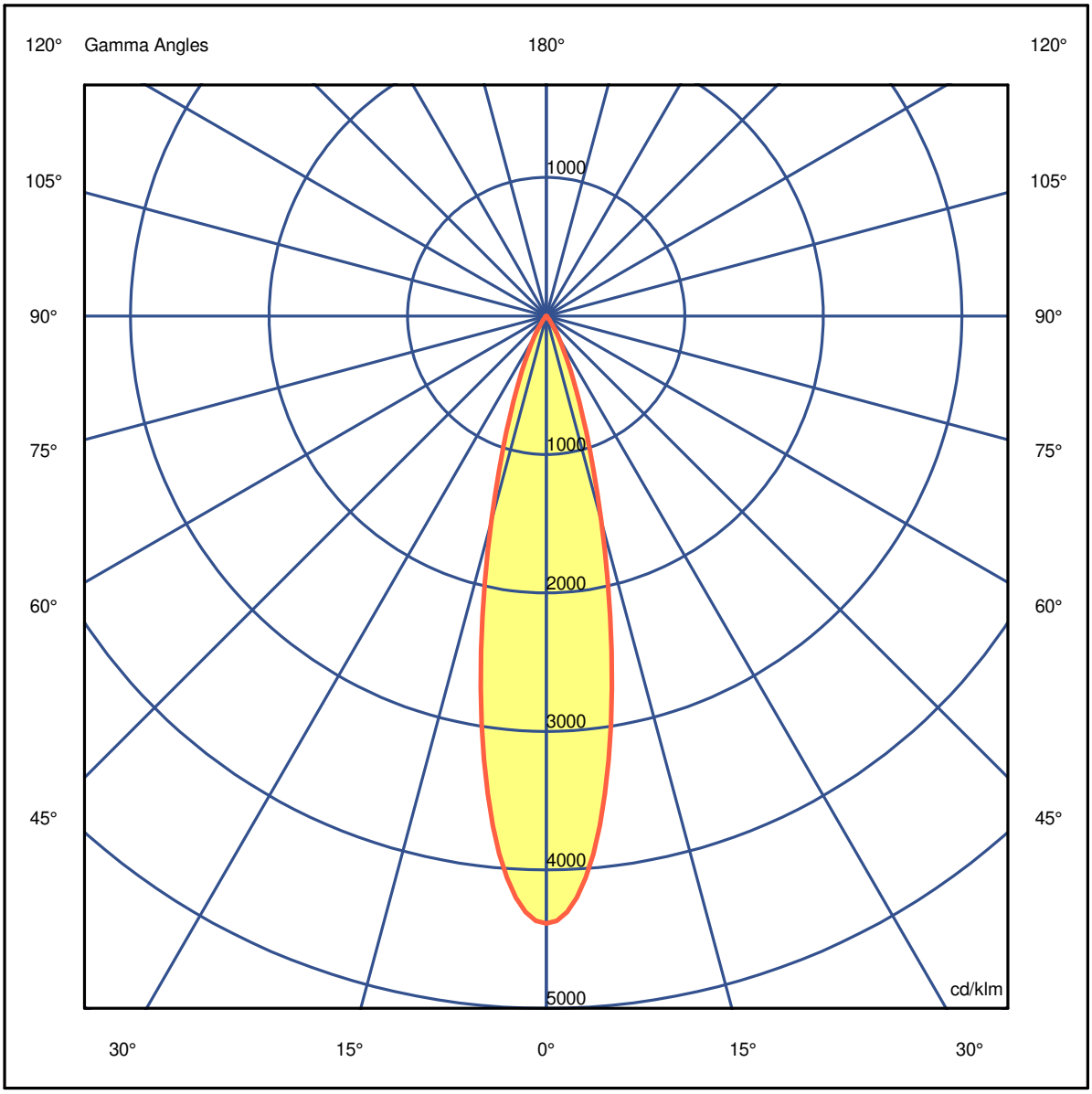

LEDS C4

Luminaire
Code 05-7976-81-EL
Name BALMORAL
Measurem.
Code 05-7976-81-EL
Name BALMORAL

Luminaire Flux	106.00 lm	Luminaire Power	3.10 W	Efficacy	34.19 lm/W	Efficiency	100.00%
Sources Flux	106.00 lm	Maximum value	4386.39 cd/klm	Position	C=0.00 G=0.00	CG	Rotosymmetrical

Diam=20mm

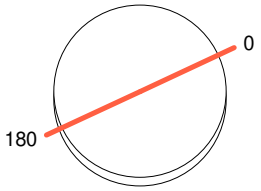

C Halfplanes

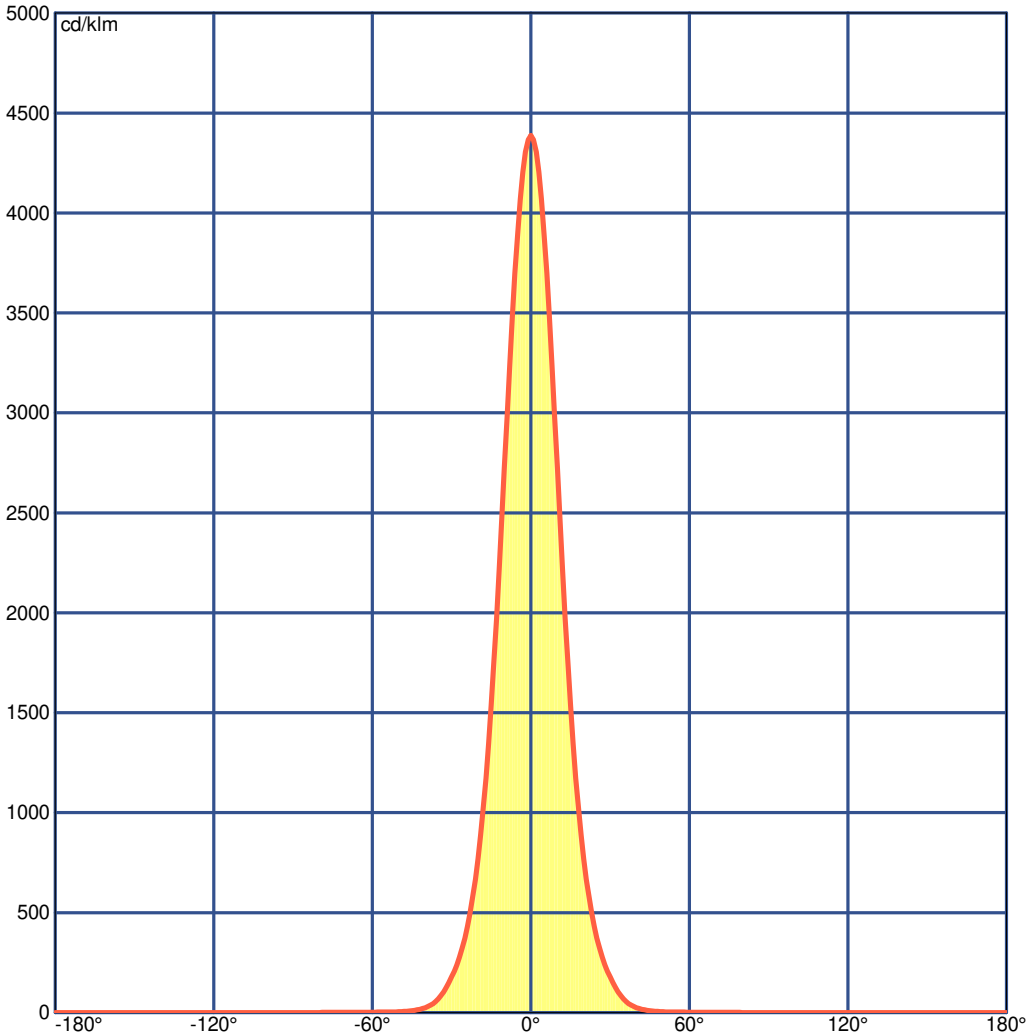

LEDS C4

Luminaire
Code 05-7976-81-EL
Name BALMORAL
Measurem.
Code 05-7976-81-EL
Name BALMORAL

Luminaire Flux	106.00 lm	Luminaire Power	3.10 W	Efficacy	34.19 lm/W	Efficiency	100.00%
Sources Flux	106.00 lm	Maximum value	4386.39 cd/klm	Position	C=0.00 G=0.00	CG	Rotosymmetrical

UGR
S = 0.250

Reflectancies										
Ceiling/Cavity	0.7	0.7	0.5	0.5	0.3	0.7	0.7	0.5	0.5	0.3
Walls	0.5	0.3	0.5	0.3	0.3	0.5	0.3	0.5	0.3	0.3
WorkingPlane	0.2	0.2	0.2	0.2	0.2	0.2	0.2	0.2	0.2	0.2
RoomDimensions	Viewed Crosswise					Viewed Endwise				
x=2H y=2H	15.5	16.1	15.7	16.3	16.5	15.5	16.1	15.7	16.3	16.5
x=2H y=3H	15.4	16.0	15.7	16.2	16.4	15.4	16.0	15.7	16.2	16.4
x=2H y=4H	15.3	15.9	15.7	16.1	16.4	15.3	15.9	15.7	16.1	16.4
x=2H y=6H	15.3	15.8	15.6	16.1	16.4	15.3	15.8	15.6	16.1	16.4
x=2H y=8H	15.3	15.8	15.6	16.0	16.3	15.3	15.8	15.6	16.0	16.3
x=2H y=12H	15.2	15.7	15.6	16.0	16.3	15.2	15.7	15.6	16.0	16.3
x=4H y=2H	15.3	15.8	15.6	16.1	16.3	15.3	15.8	15.6	16.1	16.3
x=4H y=3H	15.2	15.7	15.6	16.0	16.3	15.2	15.7	15.6	16.0	16.3
x=4H y=4H	15.2	15.6	15.6	15.9	16.3	15.2	15.6	15.6	15.9	16.3
x=4H y=6H	15.2	15.5	15.6	15.9	16.2	15.2	15.5	15.6	15.9	16.2
x=4H y=8H	15.2	15.4	15.6	15.8	16.2	15.2	15.4	15.6	15.8	16.2
x=4H y=12H	15.1	15.4	15.6	15.8	16.2	15.1	15.4	15.6	15.8	16.2
x=8H y=4H	15.1	15.4	15.5	15.8	16.2	15.1	15.4	15.5	15.8	16.2
x=8H y=6H	15.1	15.3	15.6	15.7	16.2	15.1	15.3	15.6	15.7	16.2
x=8H y=8H	15.1	15.3	15.6	15.7	16.2	15.1	15.3	15.6	15.7	16.2
x=8H y=12H	15.1	15.2	15.5	15.7	16.2	15.1	15.2	15.5	15.7	16.2
x=12H y=4H	15.1	15.3	15.5	15.7	16.2	15.1	15.3	15.5	15.7	16.2
x=12H y=6H	15.1	15.2	15.5	15.7	16.1	15.1	15.2	15.5	15.7	16.1
x=12H y=8H	15.0	15.2	15.5	15.7	16.2	15.0	15.2	15.5	15.7	16.2

LEDS C4

Luminaire
Code 05-7976-81-EL
Name BALMORAL
Measurem.
Code 05-7976-81-EL
Name BALMORAL

Luminaire Flux	106.00 lm	Luminaire Power	3.10 W	Efficacy	34.19 lm/W	Efficiency	100.00%
Sources Flux	106.00 lm	Maximum value	4386.39 cd/klm	Position	C=0.00 G=0.00	CG	Rotosymmetrical

Total Flux=106.00 Luminaire Flux=106.00

RI	0.60	0.80	1.00	1.25	1.50	2.00	2.50	3.00	4.00	5.00	10.00	20.00
DRR	0.74	0.78	0.82	0.86	0.88	0.93	0.95	0.97	0.99	1.00	1.02	1.02
RC	-	-	-	-	-	-	-	-	-	-	-	-

Zonal Flux per 1000 Lumen

Y°	10	20	30	40	50	60	70	80	90	100	110	120	130	140	150	160	170	180
ZF(Y)	333	760	939	987	996	998	999	1000	1000	1000	1000	1000	1000	1000	1000	1000	1000	1000

CIE Flux Codes
99 100 100 100 100

C.I.E.	-/-/-/-/-/-/-/-/-/-/-	LOR	100.00000 %
D DIN 5040	A60	ULOR	0.00000 %
F UTE	--	DLOR	100.00000 %
B NBN	BZ 1	UFF	0.00000 %
RN	0.00000 %	DFF	100.00000 %
BLF	1.0	FFR	0.00000 %

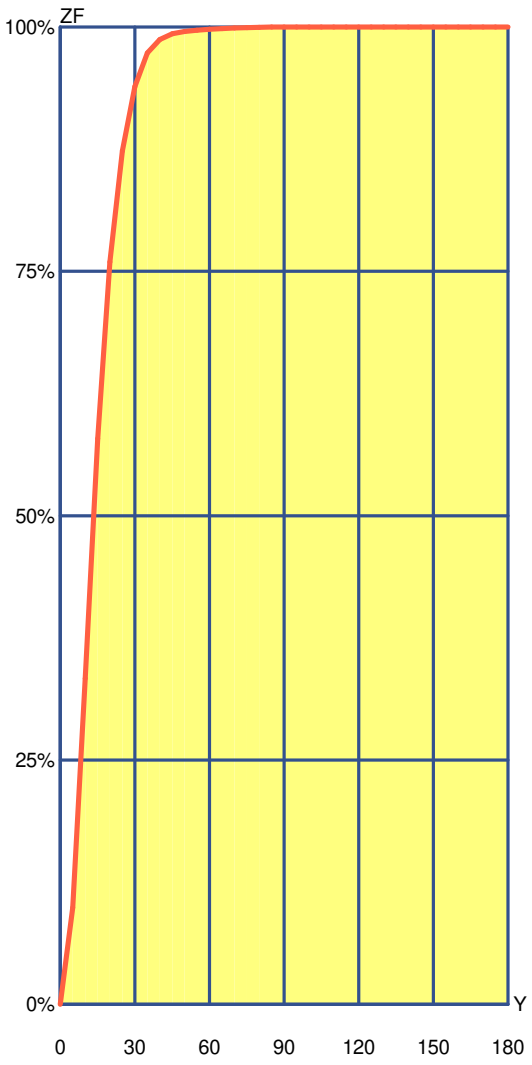

Zonal Flux				
Gamma °	Flux	Sum lm	Flux [%]	Sum [%]
0°	0.00	0.00	0.00%	0.00 %
5°	98.94	98.94	9.89 %	9.89 %
10°	234.51	333.46	23.45 %	33.35 %
15°	245.18	578.64	24.52 %	57.86 %
20°	180.94	759.57	18.09 %	75.96 %
25°	113.61	873.18	11.36 %	87.32 %
30°	65.92	939.10	6.59 %	93.91 %
35°	34.30	973.39	3.43 %	97.34 %
40°	13.98	987.37	1.40 %	98.74 %
45°	5.67	993.04	0.57 %	99.30 %
50°	2.51	995.55	0.25 %	99.55 %
55°	1.25	996.80	0.13 %	99.68 %
60°	0.96	997.76	0.10 %	99.78 %
65°	0.76	998.52	0.08 %	99.85 %
70°	0.58	999.10	0.06 %	99.91 %
75°	0.43	999.53	0.04 %	99.95 %
80°	0.28	999.81	0.03 %	99.98 %
85°	0.15	999.95	0.01 %	100.00 %
90°	0.05	1000.00	0.00 %	100.00 %
95°	0.00	1000.00	0.00 %	100.00 %
100°	0.00	1000.00	0.00 %	100.00 %
105°	0.00	1000.00	0.00 %	100.00 %
110°	0.00	1000.00	0.00 %	100.00 %
115°	0.00	1000.00	0.00 %	100.00 %
120°	0.00	1000.00	0.00 %	100.00 %
125°	0.00	1000.00	0.00 %	100.00 %
130°	0.00	1000.00	0.00 %	100.00 %
135°	0.00	1000.00	0.00 %	100.00 %
140°	0.00	1000.00	0.00 %	100.00 %
145°	0.00	1000.00	0.00 %	100.00 %
150°	0.00	1000.00	0.00 %	100.00 %
155°	0.00	1000.00	0.00 %	100.00 %
160°	0.00	1000.00	0.00 %	100.00 %
165°	0.00	1000.00	0.00 %	100.00 %
170°	0.00	1000.00	0.00 %	100.00 %
175°	0.00	1000.00	0.00 %	100.00 %
180°	0.00	1000.00	0.00 %	100.00 %

LEDS C4

Luminaire
Code 05-7976-81-EL
Name BALMORAL
Measurem.
Code 05-7976-81-EL
Name BALMORAL

Luminaire Flux	106.00 lm	Luminaire Power	3.10 W	Efficacy	34.19 lm/W	Efficiency	100.00%
Sources Flux	106.00 lm	Maximum value	4386.39 cd/klm	Position	C=0.00 G=0.00	CG	Rotosymmetrical

Utilizations CIE

Mounting Direct Normalization Normalised Suspension Ratio 1/3 Standard CIE Settings

Ceiling

K	8873	8773	8871	8771	7773	7771	7753	7553	7751	7551	7731	7331	7711	7111	5551	5531	5331	5511	5111	3331	3311	1111	0000
0.60	160	144	89	81	137	77	93	79	50	42	31	23	18	12	40	25	22	14	12	21	12	11	0
0.80	194	178	98	90	169	86	123	108	59	52	40	32	25	19	49	33	30	21	18	28	18	16	0
1.00	217	202	99	93	192	89	147	131	65	58	46	38	32	25	54	40	36	28	24	34	24	22	0
1.25	240	226	101	96	215	92	172	157	70	64	53	45	40	32	60	46	43	35	31	41	31	28	0
1.50	258	245	102	97	233	93	193	178	74	69	59	51	46	38	65	52	49	41	37	47	37	34	0
2.00	281	270	99	96	258	93	224	209	78	74	67	60	57	49	70	60	57	51	47	55	47	43	0
2.50	297	288	97	94	275	91	246	233	81	77	72	66	64	57	73	66	63	59	55	61	55	51	0
3.00	308	300	95	93	287	90	263	251	83	79	76	70	70	63	76	70	68	65	61	65	61	57	0
4.00	325	319	95	94	305	91	286	276	86	84	82	77	78	72	80	77	75	73	69	72	69	65	0
5.00	336	331	95	94	317	92	302	293	89	87	86	82	83	78	83	81	79	79	75	77	75	71	0
10.00	361	358	96	96	343	94	337	332	94	93	95	93	95	92	90	91	90	91	89	88	88	85	0
20.00	374	373	98	98	358	96	357	354	98	98	100	99	102	100	95	97	96	99	98	94	96	93	0

Wall

K	8873	8773	8871	8771	7773	7771	7753	7553	7751	7551	7731	7331	7711	7111	5551	5531	5331	5511	5111	3331	3311	1111	0000
0.60	276	267	187	182	263	180	207	201	145	142	122	119	105	103	140	119	118	103	103	117	103	102	79
0.80	309	299	199	195	292	191	238	229	160	156	137	133	120	117	153	133	132	118	116	131	116	115	89
1.00	323	313	195	192	304	188	253	244	161	157	140	136	124	121	154	136	134	122	120	132	120	118	88
1.25	339	329	195	191	317	187	271	261	164	160	145	141	131	126	156	140	138	127	125	136	124	122	89
1.50	349	340	193	189	327	185	284	273	164	161	148	143	134	130	156	142	140	130	127	137	126	124	88
2.00	349	341	172	170	324	165	289	279	150	147	138	133	127	122	141	131	129	121	119	125	117	113	74
2.50	341	334	151	149	315	144	286	276	133	130	123	119	115	110	124	116	114	109	106	109	103	98	57
3.00	329	322	128	126	302	122	277	268	113	111	106	102	100	95	104	98	96	93	90	91	86	81	38
4.00	319	314	106	105	291	100	272	264	94	92	89	86	85	80	84	80	79	77	74	72	70	63	17
5.00	308	303	86	85	279	80	263	256	76	75	73	70	70	66	66	63	62	61	59	55	53	46	0
10.00	234	231	0	0	203	0	197	192	0	0	0	0	0	0	0	0	0	0	0	0	0	0	0
20.00	97	96	0	0	66	0	65	62	0	0	0	0	0	0	0	0	0	0	0	0	0	0	0

Working Pl.

K	8873	8773	8871	8771	7773	7771	7753	7553	7751	7551	7731	7331	7711	7111	5551	5531	5331	5511	5111	3331	3311	1111	0000
0.60	912	903	851	846	897	843	829	822	798	795	768	765	746	744	793	765	764	745	744	763	744	743	735
0.80	973	962	897	891	953	887	886	877	845	841	815	811	792	789	837	810	809	790	788	807	788	786	778
1.00	1000	1000	937	932	1000	927	941	930	890	885	862	857	841	836	880	856	854	837	835	851	834	832	824
1.25	1000	1000	967	962	1000	956	986	974	924	919	898	893	878	873	912	891	888	873	870	885	869	865	858
1.50	1000	1000	988	984	1000	977	1000	1000	948	943	925	919	906	900	936	916	914	900	896	909	894	890	882
2.00	1000	1000	1000	1000	1000	1000	1000	1000	989	984	971	964	956	949	974	960	957	947	943	950	939	933	926
2.50	1000	1000	1000	1000	1000	1000	1000	1000	1000	1000	1000	995	989	982	999	988	986	978	974	977	969	961	955
3.00	1000	1000	1000	1000	1000	1000	1000	1000	1000	1000	1000	1000	1000	1000	1000	1000	1000	1000	997	997	991	981	975
4.00	1000	1000	1000	1000	1000	1000	1000	1000	1000	1000	1000	1000	1000	1000	1000	1000	1000	1000	1000	1000	1000	998	991
5.00	1000	1000	1000	1000	1000	1000	1000	1000	1000	1000	1000	1000	1000	1000	1000	1000	1000	1000	1000	1000	1000	1000	1000
10.00	1000	1000	1000	1000	1000	1000	1000	1000	1000	1000	1000	1000	1000	1000	1000	1000	1000	1000	1000	1000	1000	1000	1000
20.00	1000	1000	1000	1000	1000	1000	1000	1000	1000	1000	1000	1000	1000	1000	1000	1000	1000	1000	1000	1000	1000	1000	1000

LM53 SHR C0-C180: 0.407 SHR C90-C270: 0.407 SHR Square: 0.424

LEDS C4

Luminaire
Code 05-7976-81-EL
Name BALMORAL
Measurem.
Code 05-7976-81-EL
Name BALMORAL

Luminaire Flux	106.00 lm	Luminaire Power	3.10 W	Efficacy	34.19 lm/W	Efficiency	100.00%
Sources Flux	106.00 lm	Maximum value	4386.39 cd/klm	Position	C=0.00 G=0.00	CG	Rotosymmetrical

Width at 50.00 % of Max Intensity

H[m]	1.00	2.00	3.00	4.00	5.00	H[m]	1.00	2.00	3.00	4.00	5.00
OA	0.21	0.43	0.64	0.86	1.07	OC	0.21	0.43	0.64	0.86	1.07
OB	0.21	0.43	0.64	0.86	1.07	OD	0.21	0.43	0.64	0.86	1.07

Luminous Intensities [cd/klm]

	0	5	15	25	35	45	55	65	75	85
OA	464.96	413.11	162.69	39.33	7.21	0.99	0.25	0.14	0.07	0.02
OB	464.96	413.11	162.69	39.33	7.21	0.99	0.25	0.14	0.07	0.02
OC	464.96	413.11	162.69	39.33	7.21	0.99	0.25	0.14	0.07	0.02
OD	464.96	413.11	162.69	39.33	7.21	0.99	0.25	0.14	0.07	0.02

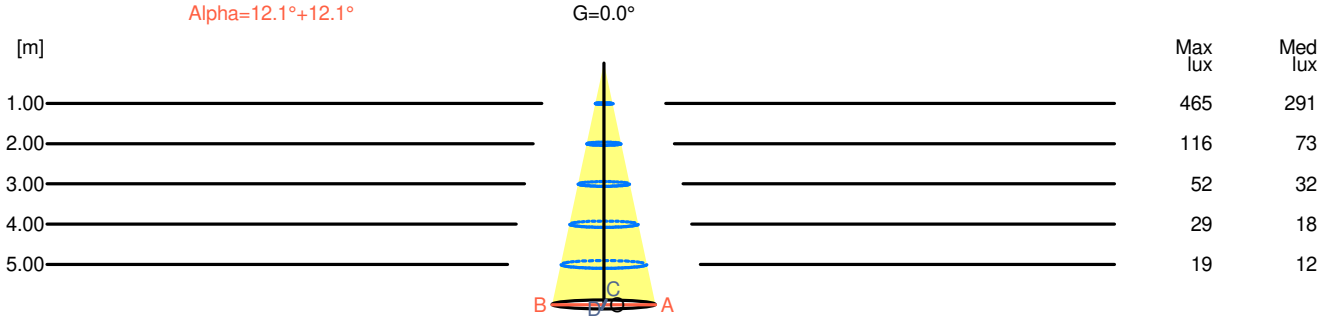

H[m]	D[m]	Max lux	Med lux
1.00	0.43	465	291
2.00	0.86	116	73
3.00	1.28	52	32
4.00	1.71	29	18
5.00	2.14	19	12

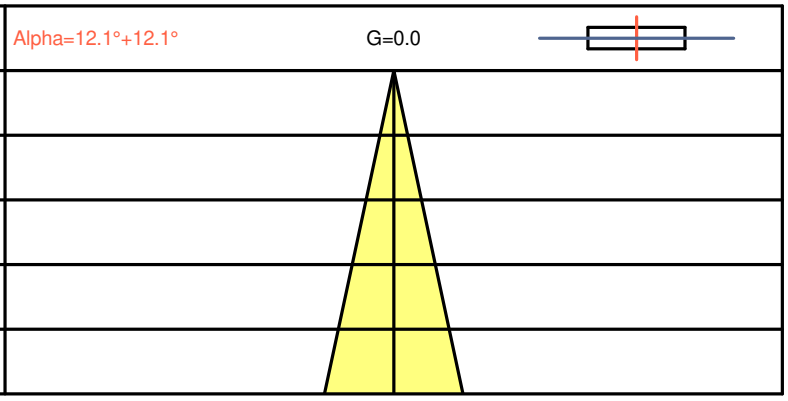

LEDS C4

Luminaire
Code 05-7976-81-EL
Name BALMORAL
Measurem.
Code 05-7976-81-EL
Name BALMORAL

Luminaire Flux	106.00 lm	Luminaire Power	3.10 W	Efficacy	34.19 lm/W	Efficiency	100.00%
Sources Flux	106.00 lm	Maximum value	4386.39 cd/klm	Position	C=0.00 G=0.00	CG	Rotosymmetrical

Isolux (Floor)

Luminaire position X=0.00m Y=0.00m Z=2.50m

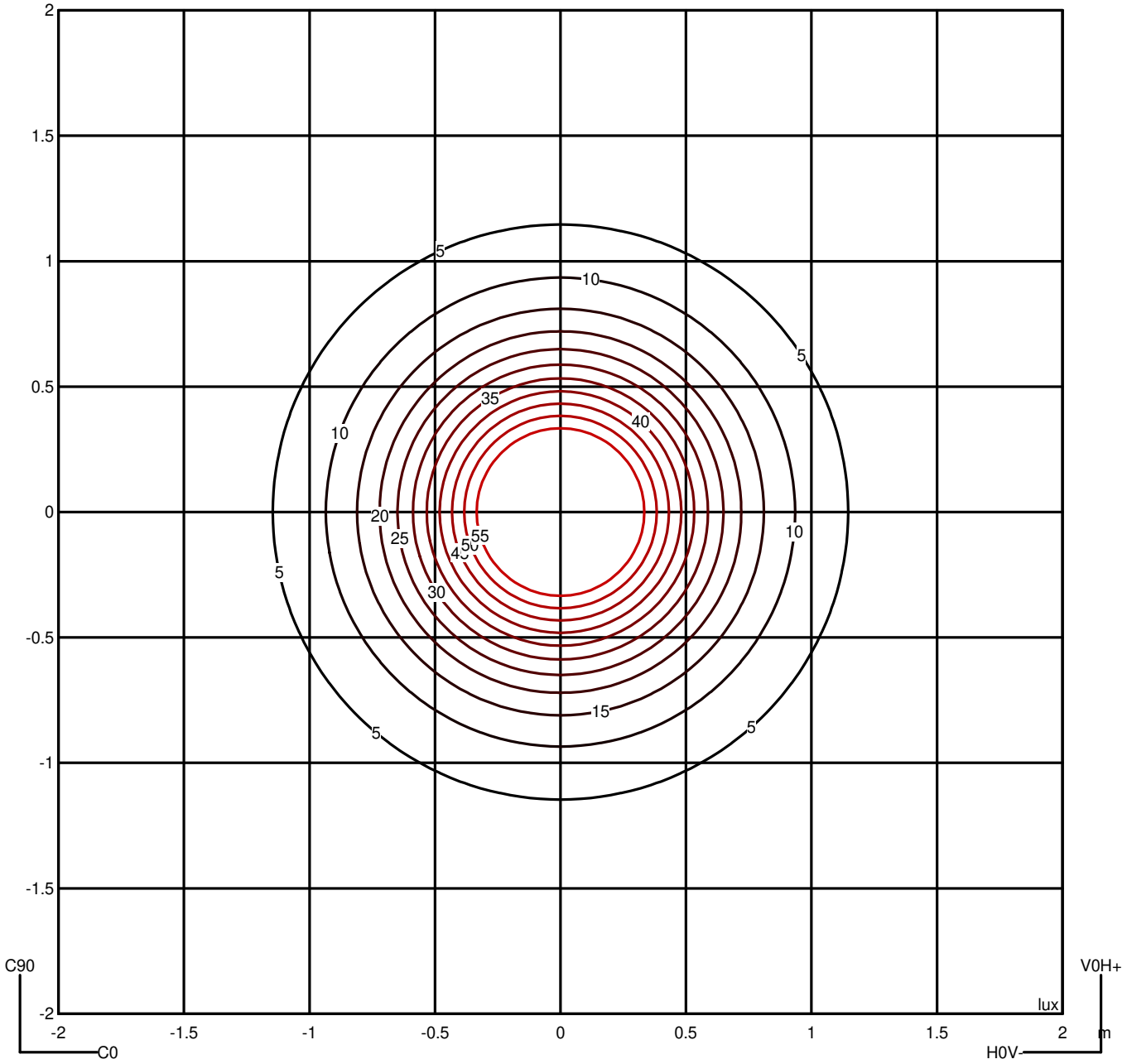

LEDS C4

Luminaire
Code 05-7976-81-EL
Name BALMORAL
Measurem.
Code 05-7976-81-EL
Name BALMORAL

Luminaire Flux	106.00 lm	Luminaire Power	3.10 W	Efficacy	34.19 lm/W	Efficiency	100.00%
Sources Flux	106.00 lm	Maximum value	4386.39 cd/klm	Position	C=0.00 G=0.00	CG	Rotosymmetrical

Luminance

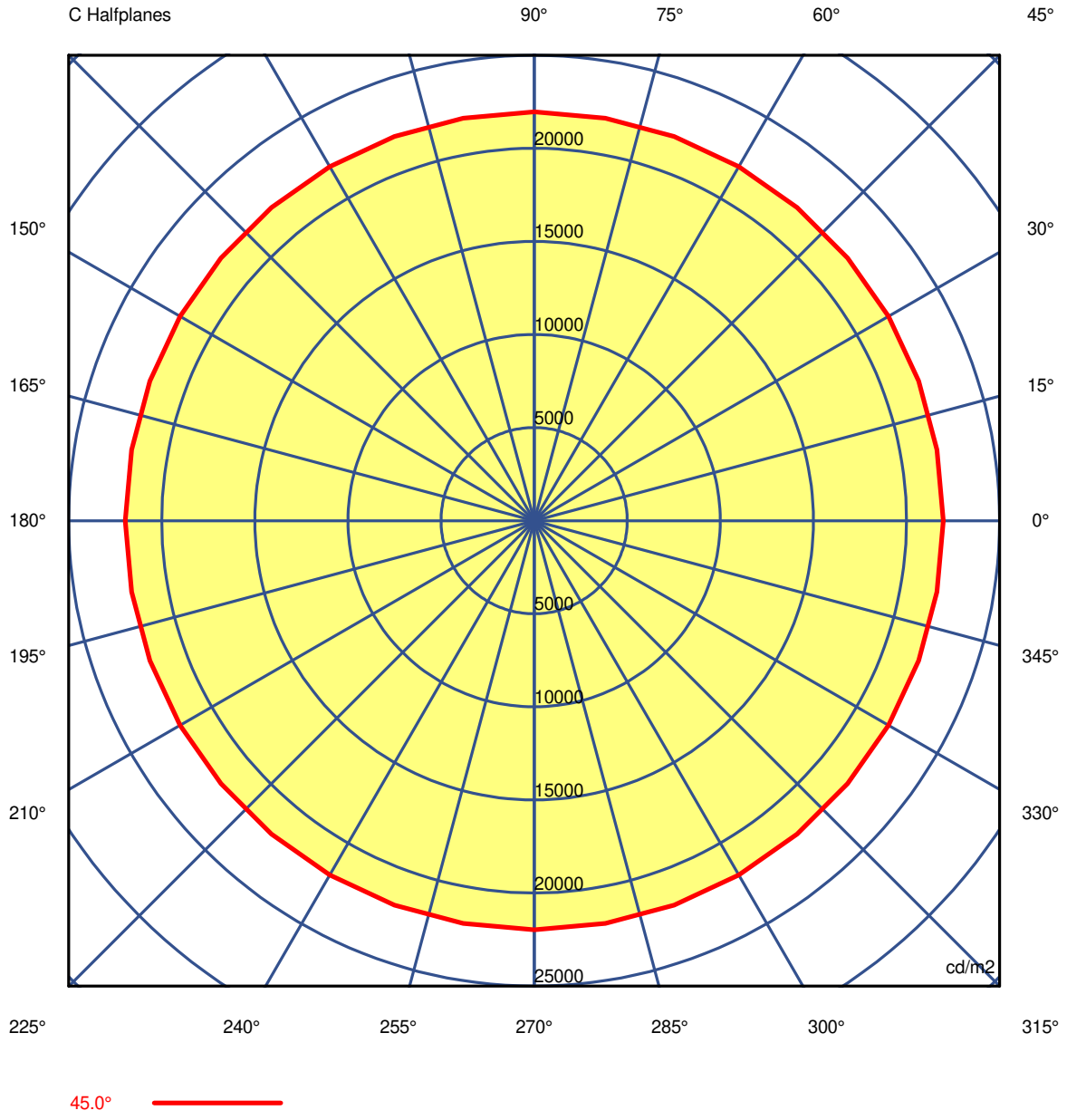

LEDS C4

Luminaire
Code 05-7976-81-EL
Name BALMORAL
Measurem.
Code 05-7976-81-EL
Name BALMORAL

Luminaire Flux	106.00 lm	Luminaire Power	3.10 W	Efficacy	34.19 lm/W	Efficiency	100.00%
Sources Flux	106.00 lm	Maximum value	4386.39 cd/klm	Position	C=0.00 G=0.00	CG	Rotosymmetrical

Luminance cd/m2 **Table 1/3**

	C 0.00	C 10.00	C 20.00	C 30.00	C 40.00	C 50.00	C 60.00	C 70.00	C 80.00	C 90.00	C 100.00	C 110.00	C 120.00
G 0.0	7308699.65	7308699.65	7308699.65	7308699.65	7308699.65	7308699.65	7308699.65	7308699.65	7308699.65	7308699.65	7308699.65	7308699.65	7308699.65
G 5.0	6518463.06	6518463.06	6518463.06	6518463.06	6518463.06	6518463.06	6518463.06	6518463.06	6518463.06	6518463.06	6518463.06	6518463.06	6518463.06
G 10.0	4608902.38	4608902.38	4608902.38	4608902.38	4608902.38	4608902.38	4608902.38	4608902.38	4608902.38	4608902.38	4608902.38	4608902.38	4608902.38
G 15.0	2647567.97	2647567.97	2647567.97	2647567.97	2647567.97	2647567.97	2647567.97	2647567.97	2647567.97	2647567.97	2647567.97	2647567.97	2647567.97
G 20.0	1363447.85	1363447.85	1363447.85	1363447.85	1363447.85	1363447.85	1363447.85	1363447.85	1363447.85	1363447.85	1363447.85	1363447.85	1363447.85
G 25.0	682157.56	682157.56	682157.56	682157.56	682157.56	682157.56	682157.56	682157.56	682157.56	682157.56	682157.56	682157.56	682157.56
G 30.0	340152.35	340152.35	340152.35	340152.35	340152.35	340152.35	340152.35	340152.35	340152.35	340152.35	340152.35	340152.35	340152.35
G 35.0	138341.67	138341.67	138341.67	138341.67	138341.67	138341.67	138341.67	138341.67	138341.67	138341.67	138341.67	138341.67	138341.67
G 40.0	52670.11	52670.11	52670.11	52670.11	52670.11	52670.11	52670.11	52670.11	52670.11	52670.11	52670.11	52670.11	52670.11
G 45.0	21967.19	21967.19	21967.19	21967.19	21967.19	21967.19	21967.19	21967.19	21967.19	21967.19	21967.19	21967.19	21967.19
G 50.0	9680.57	9680.57	9680.57	9680.57	9680.57	9680.57	9680.57	9680.57	9680.57	9680.57	9680.57	9680.57	9680.57
G 55.0	6917.86	6917.86	6917.86	6917.86	6917.86	6917.86	6917.86	6917.86	6917.86	6917.86	6917.86	6917.86	6917.86
G 60.0	5981.33	5981.33	5981.33	5981.33	5981.33	5981.33	5981.33	5981.33	5981.33	5981.33	5981.33	5981.33	5981.33
G 65.0	5305.97	5305.97	5305.97	5305.97	5305.97	5305.97	5305.97	5305.97	5305.97	5305.97	5305.97	5305.97	5305.97
G 70.0	4766.23	4766.23	4766.23	4766.23	4766.23	4766.23	4766.23	4766.23	4766.23	4766.23	4766.23	4766.23	4766.23
G 75.0	4234.39	4234.39	4234.39	4234.39	4234.39	4234.39	4234.39	4234.39	4234.39	4234.39	4234.39	4234.39	4234.39
G 80.0	3738.75	3738.75	3738.75	3738.75	3738.75	3738.75	3738.75	3738.75	3738.75	3738.75	3738.75	3738.75	3738.75
G 85.0	3194.96	3194.96	3194.96	3194.96	3194.96	3194.96	3194.96	3194.96	3194.96	3194.96	3194.96	3194.96	3194.96
G 90.0	0.00	0.00	0.00	0.00	0.00	0.00	0.00	0.00	0.00	0.00	0.00	0.00	0.00

LEDS C4

Luminaire
Code 05-7976-81-EL
Name BALMORAL
Measurem.
Code 05-7976-81-EL
Name BALMORAL

Luminaire Flux	106.00 lm	Luminaire Power	3.10 W	Efficacy	34.19 lm/W	Efficiency	100.00%
Sources Flux	106.00 lm	Maximum value	4386.39 cd/klm	Position	C=0.00 G=0.00	CG	Rotosymmetrical

Luminance cd/m2 **Table 2/3**

	C 130.00	C 140.00	C 150.00	C 160.00	C 170.00	C 180.00	C 190.00	C 200.00	C 210.00	C 220.00	C 230.00	C 240.00	C 250.00
G 0.0	7308699.65	7308699.65	7308699.65	7308699.65	7308699.65	7308699.65	7308699.65	7308699.65	7308699.65	7308699.65	7308699.65	7308699.65	7308699.65
G 5.0	6518463.06	6518463.06	6518463.06	6518463.06	6518463.06	6518463.06	6518463.06	6518463.06	6518463.06	6518463.06	6518463.06	6518463.06	6518463.06
G 10.0	4608902.38	4608902.38	4608902.38	4608902.38	4608902.38	4608902.38	4608902.38	4608902.38	4608902.38	4608902.38	4608902.38	4608902.38	4608902.38
G 15.0	2647567.97	2647567.97	2647567.97	2647567.97	2647567.97	2647567.97	2647567.97	2647567.97	2647567.97	2647567.97	2647567.97	2647567.97	2647567.97
G 20.0	1363447.85	1363447.85	1363447.85	1363447.85	1363447.85	1363447.85	1363447.85	1363447.85	1363447.85	1363447.85	1363447.85	1363447.85	1363447.85
G 25.0	682157.56	682157.56	682157.56	682157.56	682157.56	682157.56	682157.56	682157.56	682157.56	682157.56	682157.56	682157.56	682157.56
G 30.0	340152.35	340152.35	340152.35	340152.35	340152.35	340152.35	340152.35	340152.35	340152.35	340152.35	340152.35	340152.35	340152.35
G 35.0	138341.67	138341.67	138341.67	138341.67	138341.67	138341.67	138341.67	138341.67	138341.67	138341.67	138341.67	138341.67	138341.67
G 40.0	52670.11	52670.11	52670.11	52670.11	52670.11	52670.11	52670.11	52670.11	52670.11	52670.11	52670.11	52670.11	52670.11
G 45.0	21967.19	21967.19	21967.19	21967.19	21967.19	21967.19	21967.19	21967.19	21967.19	21967.19	21967.19	21967.19	21967.19
G 50.0	9680.57	9680.57	9680.57	9680.57	9680.57	9680.57	9680.57	9680.57	9680.57	9680.57	9680.57	9680.57	9680.57
G 55.0	6917.86	6917.86	6917.86	6917.86	6917.86	6917.86	6917.86	6917.86	6917.86	6917.86	6917.86	6917.86	6917.86
G 60.0	5981.33	5981.33	5981.33	5981.33	5981.33	5981.33	5981.33	5981.33	5981.33	5981.33	5981.33	5981.33	5981.33
G 65.0	5305.97	5305.97	5305.97	5305.97	5305.97	5305.97	5305.97	5305.97	5305.97	5305.97	5305.97	5305.97	5305.97
G 70.0	4766.23	4766.23	4766.23	4766.23	4766.23	4766.23	4766.23	4766.23	4766.23	4766.23	4766.23	4766.23	4766.23
G 75.0	4234.39	4234.39	4234.39	4234.39	4234.39	4234.39	4234.39	4234.39	4234.39	4234.39	4234.39	4234.39	4234.39
G 80.0	3738.75	3738.75	3738.75	3738.75	3738.75	3738.75	3738.75	3738.75	3738.75	3738.75	3738.75	3738.75	3738.75
G 85.0	3194.96	3194.96	3194.96	3194.96	3194.96	3194.96	3194.96	3194.96	3194.96	3194.96	3194.96	3194.96	3194.96
G 90.0	0.00	0.00	0.00	0.00	0.00	0.00	0.00	0.00	0.00	0.00	0.00	0.00	0.00

LEDS C4

Luminaire
Code 05-7976-81-EL
Name BALMORAL
Measurem.
Code 05-7976-81-EL
Name BALMORAL

Luminaire Flux	106.00 lm	Luminaire Power	3.10 W	Efficacy	34.19 lm/W	Efficiency	100.00%
Sources Flux	106.00 lm	Maximum value	4386.39 cd/klm	Position	C=0.00 G=0.00	CG	Rotosymmetrical

Luminance cd/m2 **Table 3/3**

	C 260.00	C 270.00	C 280.00	C 290.00	C 300.00	C 310.00	C 320.00	C 330.00	C 340.00	C 350.00
G 0.0	7308699.65	7308699.65	7308699.65	7308699.65	7308699.65	7308699.65	7308699.65	7308699.65	7308699.65	7308699.65
G 5.0	6518463.06	6518463.06	6518463.06	6518463.06	6518463.06	6518463.06	6518463.06	6518463.06	6518463.06	6518463.06
G 10.0	4608902.38	4608902.38	4608902.38	4608902.38	4608902.38	4608902.38	4608902.38	4608902.38	4608902.38	4608902.38
G 15.0	2647567.97	2647567.97	2647567.97	2647567.97	2647567.97	2647567.97	2647567.97	2647567.97	2647567.97	2647567.97
G 20.0	1363447.85	1363447.85	1363447.85	1363447.85	1363447.85	1363447.85	1363447.85	1363447.85	1363447.85	1363447.85
G 25.0	682157.56	682157.56	682157.56	682157.56	682157.56	682157.56	682157.56	682157.56	682157.56	682157.56
G 30.0	340152.35	340152.35	340152.35	340152.35	340152.35	340152.35	340152.35	340152.35	340152.35	340152.35
G 35.0	138341.67	138341.67	138341.67	138341.67	138341.67	138341.67	138341.67	138341.67	138341.67	138341.67
G 40.0	52670.11	52670.11	52670.11	52670.11	52670.11	52670.11	52670.11	52670.11	52670.11	52670.11
G 45.0	21967.19	21967.19	21967.19	21967.19	21967.19	21967.19	21967.19	21967.19	21967.19	21967.19
G 50.0	9680.57	9680.57	9680.57	9680.57	9680.57	9680.57	9680.57	9680.57	9680.57	9680.57
G 55.0	6917.86	6917.86	6917.86	6917.86	6917.86	6917.86	6917.86	6917.86	6917.86	6917.86
G 60.0	5981.33	5981.33	5981.33	5981.33	5981.33	5981.33	5981.33	5981.33	5981.33	5981.33
G 65.0	5305.97	5305.97	5305.97	5305.97	5305.97	5305.97	5305.97	5305.97	5305.97	5305.97
G 70.0	4766.23	4766.23	4766.23	4766.23	4766.23	4766.23	4766.23	4766.23	4766.23	4766.23
G 75.0	4234.39	4234.39	4234.39	4234.39	4234.39	4234.39	4234.39	4234.39	4234.39	4234.39
G 80.0	3738.75	3738.75	3738.75	3738.75	3738.75	3738.75	3738.75	3738.75	3738.75	3738.75
G 85.0	3194.96	3194.96	3194.96	3194.96	3194.96	3194.96	3194.96	3194.96	3194.96	3194.96
G 90.0	0.00	0.00	0.00	0.00	0.00	0.00	0.00	0.00	0.00	0.00

SCREEN / 05-7975;7976

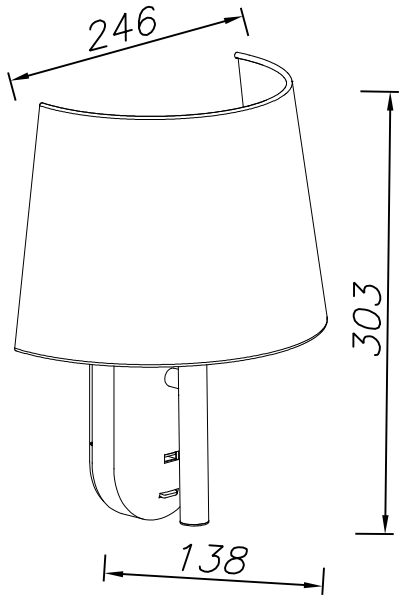

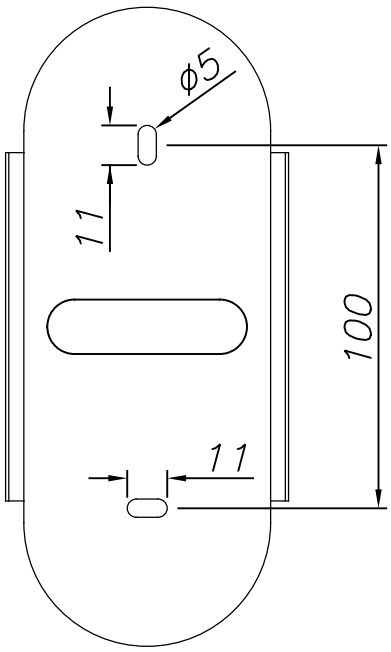

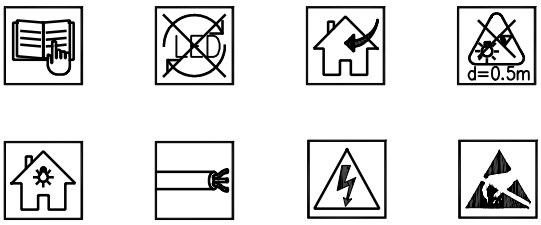

1

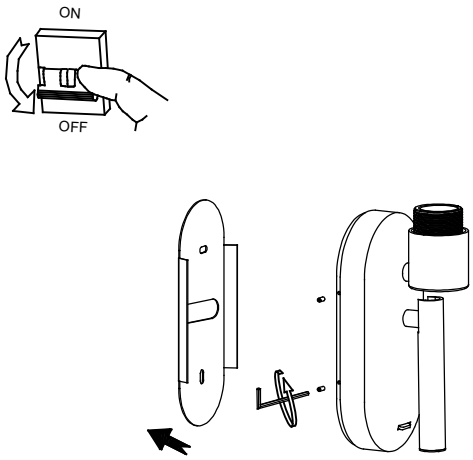

2

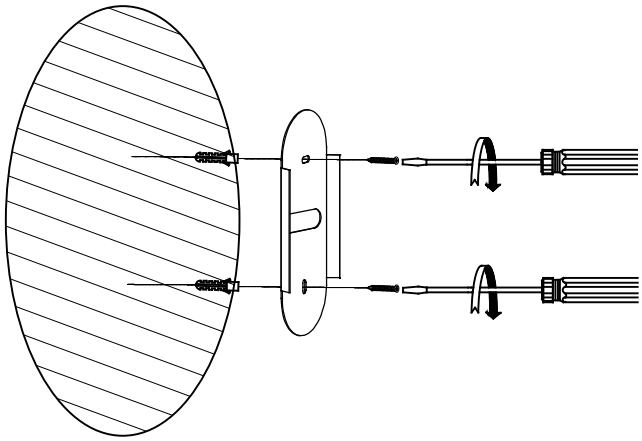

3

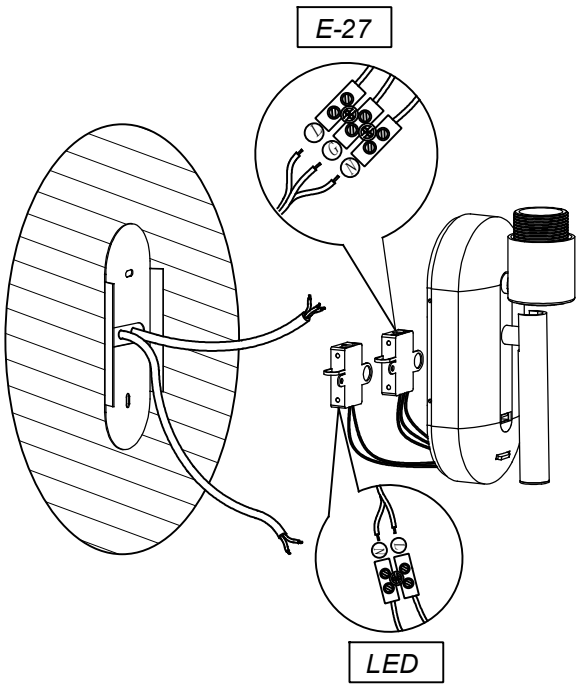

4

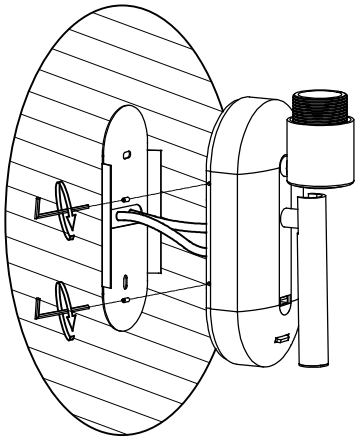

5

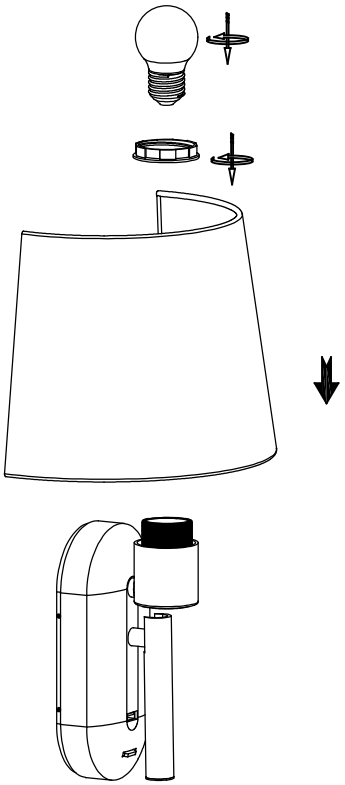
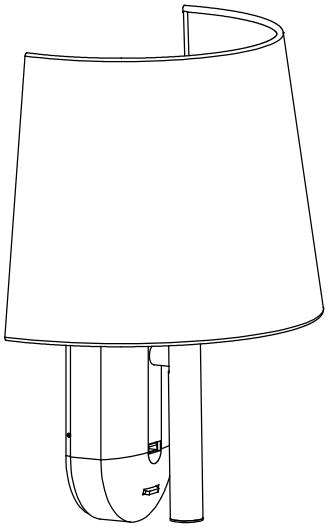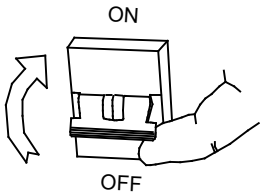
6