LEDS C4

05-6396-21-M1

V0

TOILET SLIM Wall fixture

Designer: Manel Lluscà & Carlos Santolaria

Description

Bath for indoor use.

For frontal lighting. Design by C. Santolaria and Alex & Manel Lluscà. Timeless design. No visible screws. High lumen power. IP protection, ideal for bathrooms. High CRI. High durability for intensive use. Structure material: Aluminium. Structure finish: Chrome. Diffuser material: Polycarbonate. Diffuser finish: Opal. Warranty: 5 Years.

Finish
Chrome
Opal

Material
Aluminium
Polycarbonate

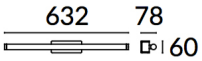

IP44 4

-

TECHNICAL CHARACTERISTICS

Light source
Light source: LED SAMSUNG
Output (W): 22 W
Total power consumption (W): 25 W
Color temperature: Warm White - 3000K
CRI: 90
Real Lumen: 1777
Nominal Lumen: 2010
Qty Leds: 88
Lm/Real W: 81
Life Time: 50.000h L70B30
Bin / Grup: VA o VB
MacAdam steps: 3 STEPS
UGR: 18.2
Photobiological risk: RG1

GEAR
Brand: LETARON
Gear included: Yes, electronic
Voltage / Frequency:
100-240V/50-60Hz
Power Factor: 0.95
Flickering: 54.6%

Luminaire
Warranty: 5 Years

Logistics
Energy Efficiency: LED A++
EAN Code: 8435381496531
Net Weight (Kg): 0.790
Weight in Kg (packaged): 1.375
Packing: 120 x 120 x 710
Masterbox: 4

The photograph may not match the reference exactly. Please read the product description to identify the finish.

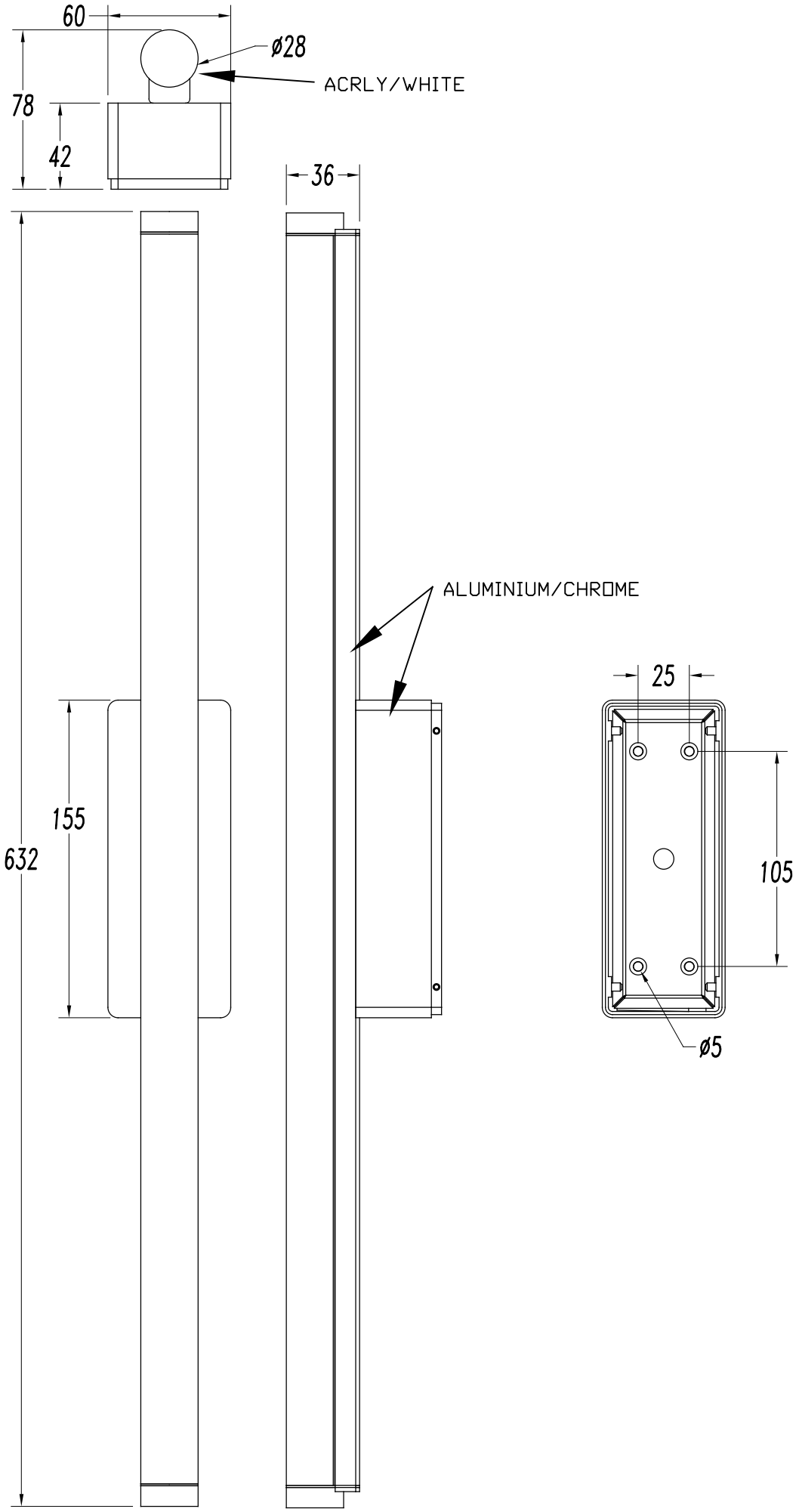

Sep-07-2017

1

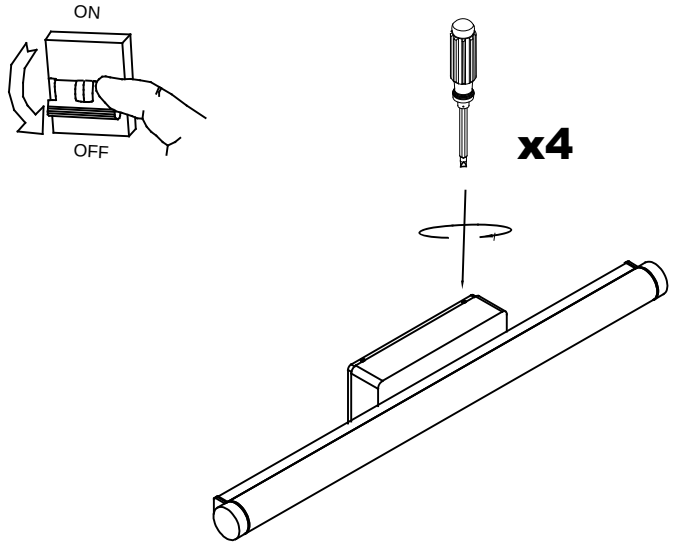

2

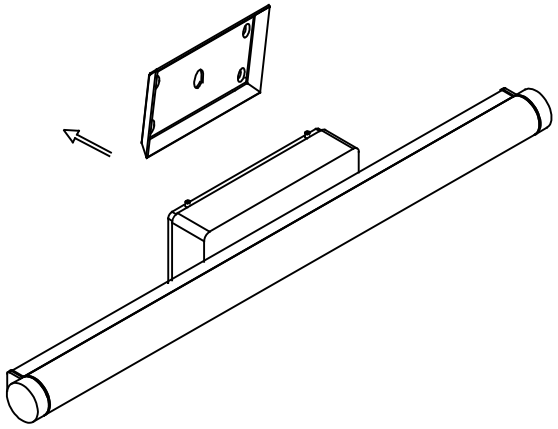

3

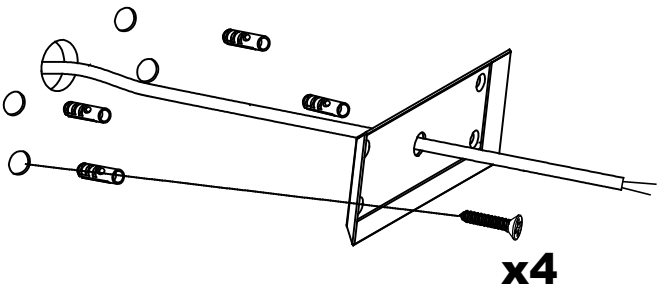

4

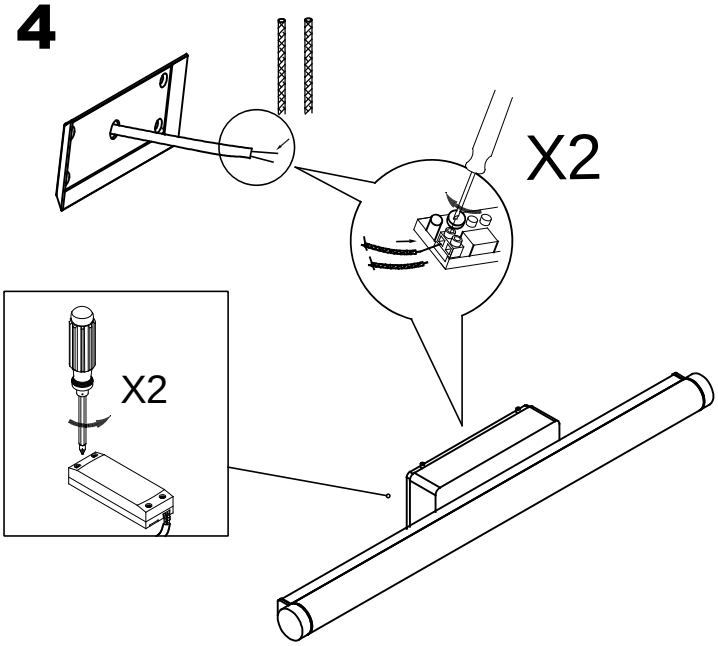

5

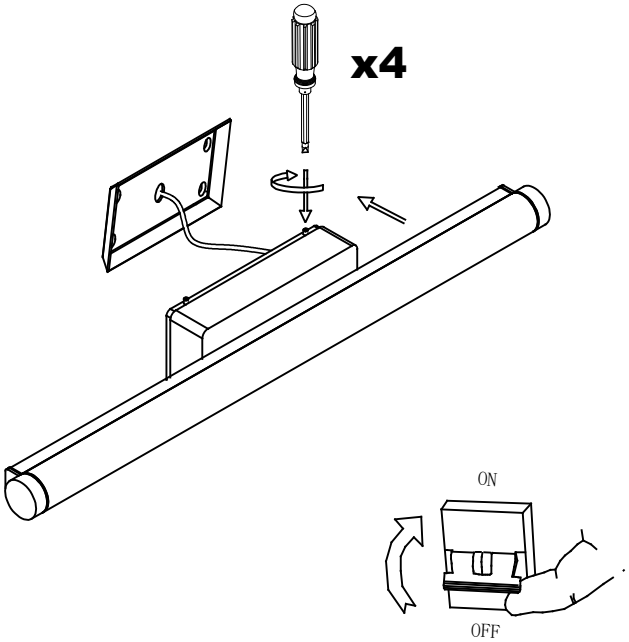

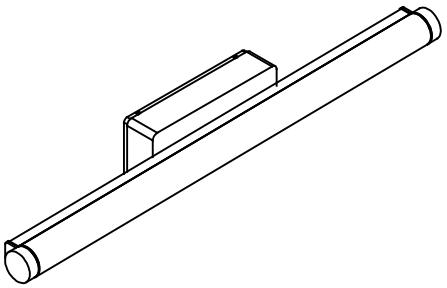

05-6395	05-6396	05-6397
LED 10W	LED 22W	LED 28.3W