LEDS C4

05-2837-21-21

V2

BOOK Wall fixture

Description
Wall light for indoor use.

For downlighting.. Optimum price-performance. Optimum visual comfort. Easy instalation. High durability for intensive use. Structure material: Steel, Anodized aluminium. Structure finish: Chrome. Warranty: 5 Years.

Finish
Chrome

Material
Steel
Anodized aluminium

IP20 30º 6

TECHNICAL CHARACTERISTICS

Light source
Light source: LED CREE
Output (W): 2.2W
Total power consumption (W): 3.5
Color temperature: Warm White - 3000K
CRI: 80
Photobiological risk: RG2
Qty Leds: 1
Life Time: 36.000h L70B30
Bin / Grup: 7C1 o 7B4
MacAdam steps: 3

GEAR
Brand: LETARON
Gear included: Yes, electronic
Voltage / Frequency: 100-240
Power Factor: 0.50

Luminaire
Warranty: 5 Years

Logistics
Energy Efficiency: LED A++
EAN Code: 8435381453213
Net Weight (Kg): 0.490
Weight in Kg (packaged): 0.796
Packing: 260 x 190 x 140
Masterbox: 6

The photograph may not match the reference exactly. Please read the product description to identify the finish.

LEDS-C4 DECORATIVE

05-2837V2

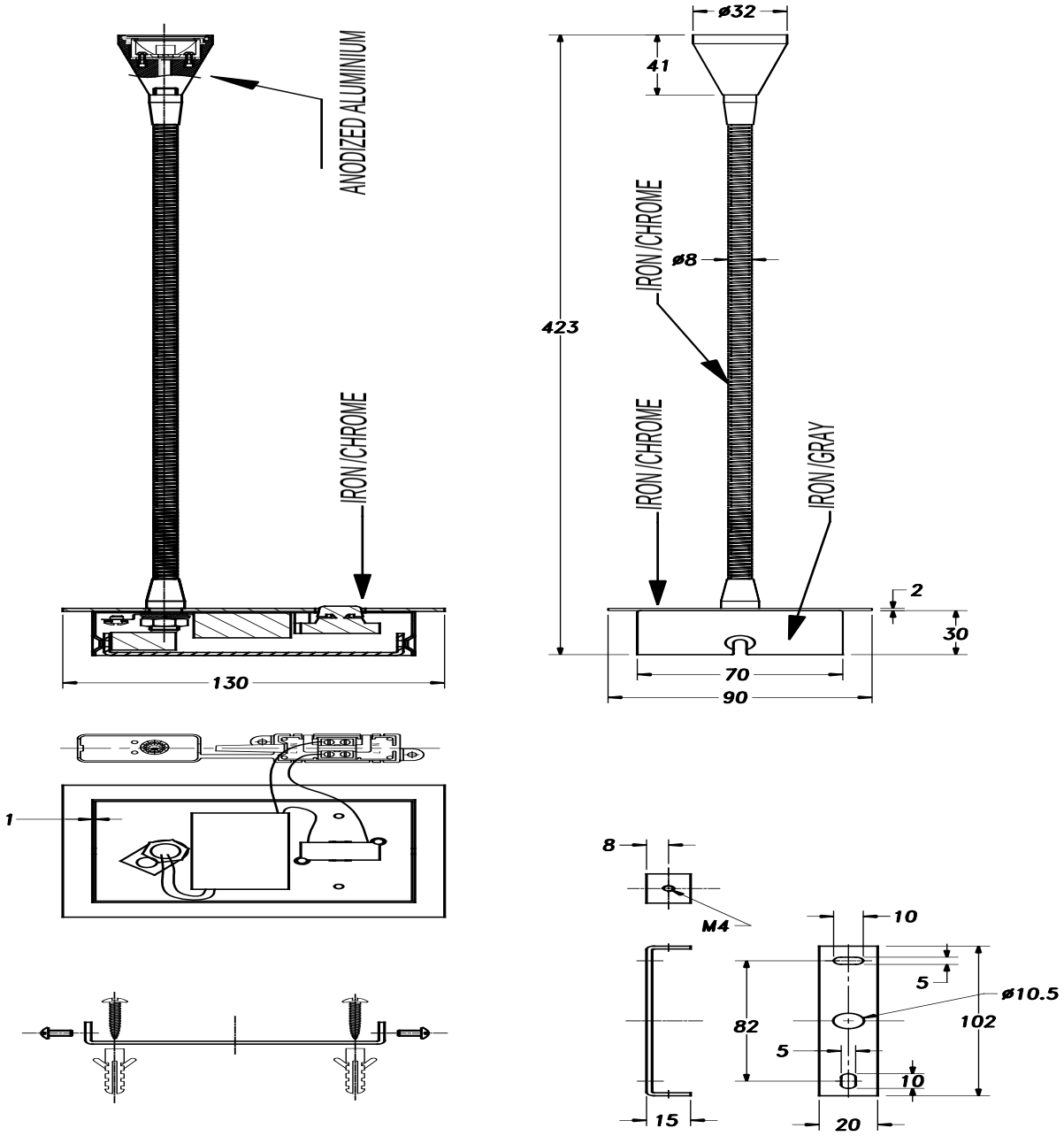

Nov-07-2016

LEDS·C4
DECORATIVE

IMC 05-2837V2

1

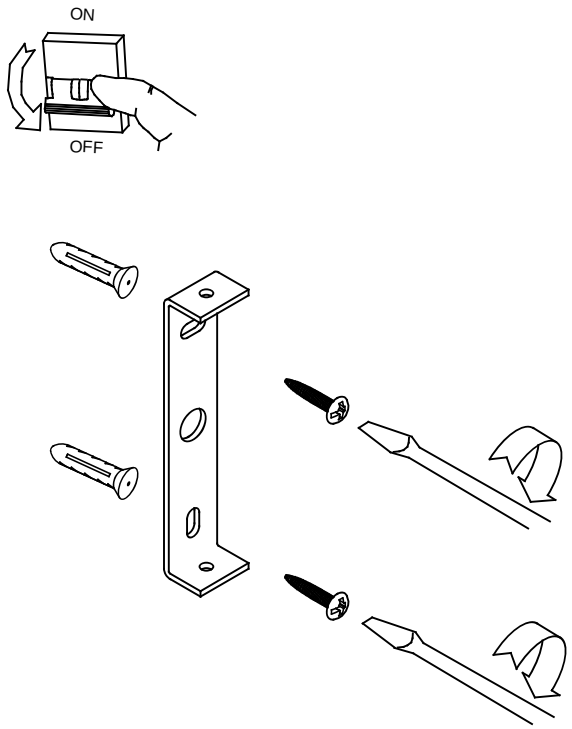

2

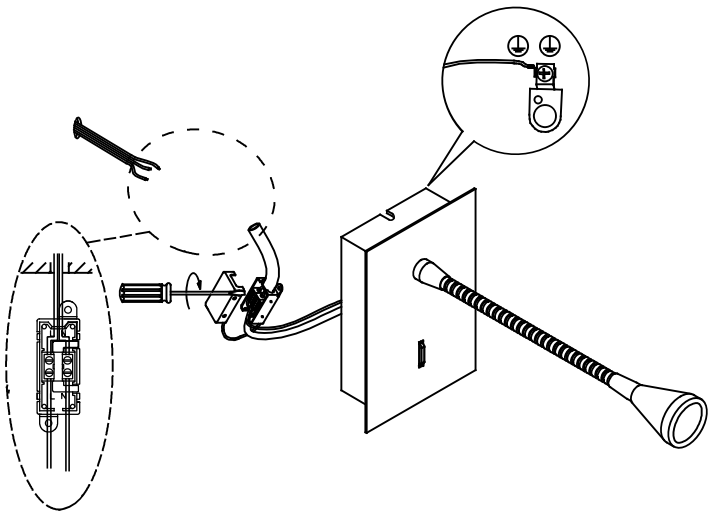

3

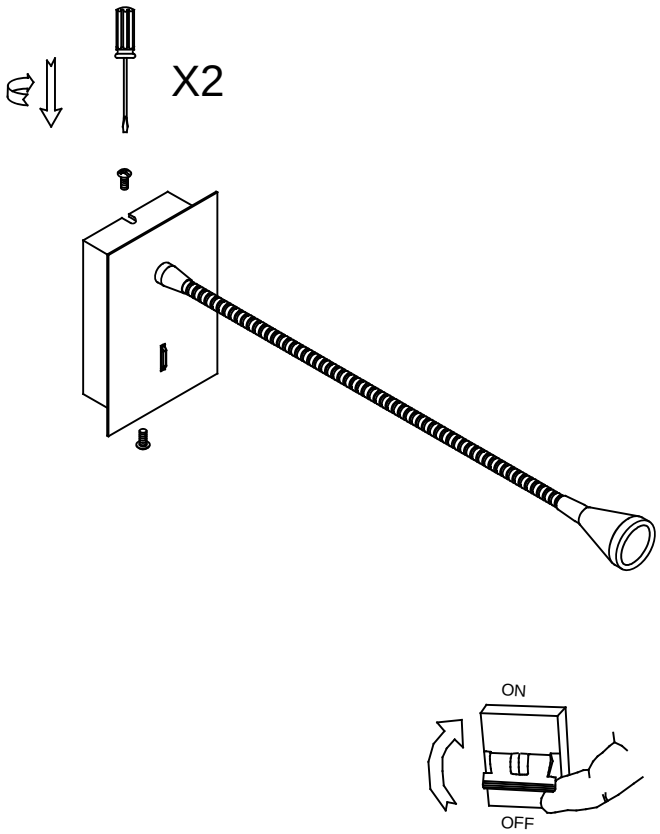

4

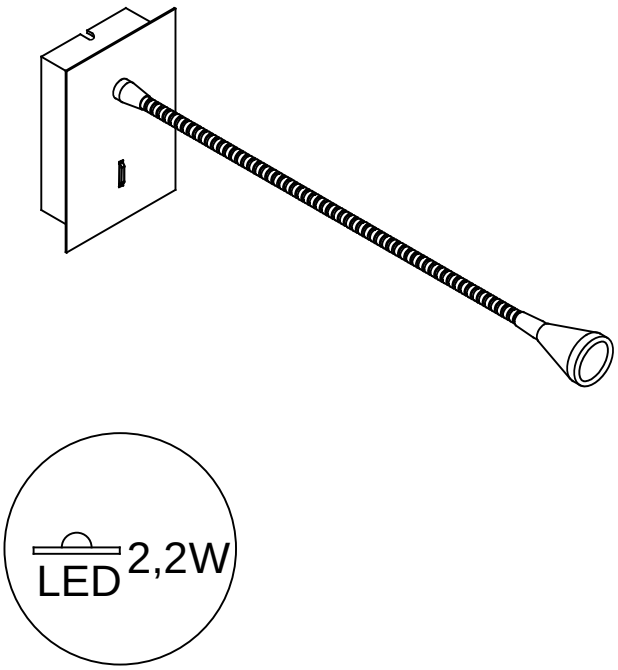

07/11/2016